Operator's manual

Vibrating plate

DPU 7060

Fe, Fet

05.2011

0217499en / 003

www.wackerneuson.com

Manufacturer

Wacker Neuson SE
Preußenstraße 41
80809 München
www.wackerneuson.com

Tel.: +49-(0)89-354 02-0
Fax: +49-(0)89-354 02-390

Translation of the original operator's manual in German

1 Foreword 6

2 Introduction 7

2.1 Means of representation for this operator's manual 7
2.2 Wacker Neuson representative 8
2.3 Indication of location 8
2.4 Described machine parts 9
2.5 Identification of the machine 9

3 Safety 11

3.1 Principle 11
3.2 Qualification of the operating personnel 14
3.3 Protective gear 15
3.4 Transport 16
3.5 Operating safety 17
3.6 Safety during the operation of vibratory plates 19
3.7 Safety when operating remote-controlled machines 20
3.8 Safety during the operation of combustion engines 21
3.9 Safety during the operation of hydraulic machines 23
3.10 Maintenance 23
3.11 Safety and information labels 25
3.12 Safety devices 28

4 Scope of delivery 29

5 Structure and function 30

5.1 Application 30
5.2 Description 30
5.2.1 Principle of the machine 30
5.2.2 Remote control 30
5.2.3 Infrared system 30
5.2.4 Receiving area and proximity area of the machine 31
5.2.5 Speed control unit (only certain machine types) 32
5.3 Functional description 33

6 Components and operator's controls 35

6.1 Components and operator's controls of the machine 35
6.2 Remote control components and operator's controls 38

7 Transport 40

7.1 Lifting eyes and tie-down lugs 41

7.2 Lifting the machine by the central suspension and transporting 41

8 Initial start up 42

8.1 Removing/installing support plates 42

9 Use and operation 44

9.1 Prior to starting the machine 44

9.1.1 Checks before startup 44

9.2 Starting up 45

9.3 Operating the machine 48

9.3.1 Machine's directions of movement 48

9.3.2 Note on the machine's directions of movement 49

9.3.3 Compacting on a slope 51

9.3.4 Moving and stopping the machine 52

9.4 Operate machine with speed control unit (only certain machine types) 52

9.5 Decomissioning 54

9.6 Recharging remote control battery 56

9.6.1 Charging the battery with the coiled helix cable 56

9.6.2 Charging battery with external charger 58

9.7 Setting transmission channel 59

10 Maintenance 64

10.1 Maintenance schedule 64

10.1.1 One-time maintenance after initial operation 64

10.1.2 Daily maintenance tasks 65

10.1.3 Regular maintenance 66

10.2 Maintenance work 68

10.2.1 Cleaning machine and remote control 68

10.2.2 Topping up with fuel 69

10.2.3 Checking motor oil level and topping up engine oil 71

10.2.4 Changing the engine oil 73

10.2.5 Checking air cleaner and cleaning or replacing air cleaner cartridge ... 75

10.2.6 Checking exciter oil level and topping up exciter oil 76

10.2.7 Checking hydraulic oil level and refilling hydraulic oil 78

10.2.8 Checking the battery acid level 79

10.2.9 Replacing the V-belt 81

11 Malfunctions 84

11.1 Machine malfunctions 84

11.2 Malfunction messages on the control panel 85

11.3 Malfunction messages in the control lamps of the remote control 87
11.4 Eliminating malfunctions 88
11.4.1 Jumpstart with a donor battery 88

12 Accessories 91
12.1 Battery 91
12.2 Support plates 91

13 Disposal 92
13.1 Disposal of batteries 92

14 Technical data 93

15 Emission control systems information and warranty 96

EC Declaration of Conformity 97

1 Foreword

This operator's manual contains information and procedures for the safe operation and maintenance of your Wacker Neuson machine. In the interest of your own safety and to prevent accidents, you should carefully read through the safety information, familiarize yourself with it and observe it at all times.

This operator's manual is not a manual for extensive maintenance and repair work. Such work should be carried out by Wacker Neuson service or authorized specialists.

The safety of the operator was one of the most important aspects taken into consideration when this machine was designed. Nevertheless, improper use or incorrect maintenance can pose a risk. Please operate and maintain your Wacker Neuson machine in accordance with the instructions in this operator's manual. Your reward will be troublefree operation and a high degree of availability.

Defective machine parts must be replaced immediately!

Please contact your Wacker Neuson representative if you have any questions concerning operation or maintenance.

All rights reserved, especially reproduction and distribution rights.

Copyright 2011 Wacker Neuson SE

No part of this publication may be reproduced in any form or by any means, electronic or mechanical, including photocopying, without the expressed written permission of Wacker Neuson.

Any type of reproduction, distribution or storage on data media of any type and form not authorized by Wacker Neuson represents an infringement of copyright and will be prosecuted.

We expressly reserve the right to make technical modifications – even without special notice – which aim at further improving our machines or their safety standards.

2 Introduction

2.1 Means of representation for this operator's manual

Warning symbols

This operator's manual contains safety imformation of the categories: DANGER, WARNING, CAUTION, NOTICE.

They should be followed to prevent danger to life and limb of the operator or damage to equipment and exclude improper service.

DANGER
This warning notice indicates immediate hazards that result in serious injury or even death.
▶ Danger can be avoided by the following the actions mentioned.

WARNING
This warning notice indicates possible hazards that can result in serious injury or even death.
▶ Danger can be avoided by the following the actions mentioned.

CAUTION
This warning notice indicates possible hazards that can result in minor injury.
▶ Danger can be avoided by the following the actions mentioned.

NOTICE
This warning notice indicates possible hazards that can result in material damage.
▶ Danger can be avoided by the following the actions mentioned.

Notes

Note: Complementary information will be displayed here.

Instructions

- ▶ This symbol indicates there is something for you to do.
- 1. Numbered instructions indicate that you have to carry out something in a defined sequence.
- ■ This symbol is used for lists.

2.2 Wacker Neuson representative

Depending on your country, your Wacker Neuson representative is your Wacker Neuson service, your Wacker Neuson affiliate or your Wacker Neuson dealer.

You can find the addresses in the Internet at www.wackerneuson.com.

The address of the manufacturer is located at the beginning of this operator's manual.

2.3 Indication of location

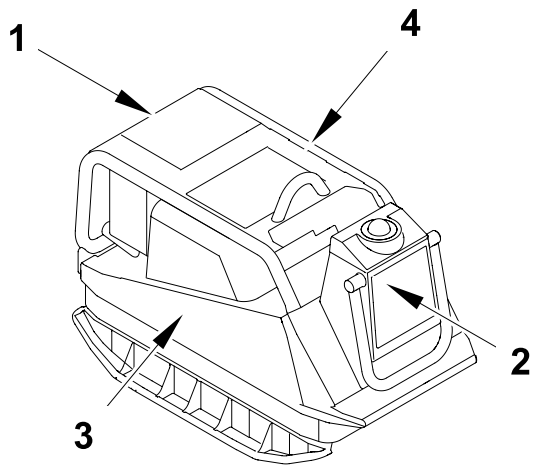

Item	Designation
1	Front
2	Rear
3	Left
4	Right

2.4 Described machine parts

This operator's manual is valid for different machine parts from a product range. Therefore some figures can differ from the actual appearance of your machine. It is also possible that the descriptions include components which are not a part of your machine.

Details for the described machine types can be found in the chapter *Technical Data*.

2.5 Identification of the machine

Nameplate position

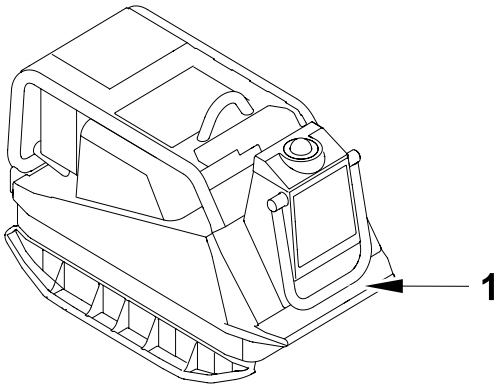

Item	Designation
1	Nameplate

Nameplate data

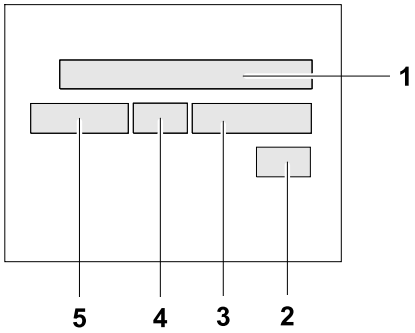

The nameplate lists information that uniquely identifies your machine. This information is needed to order spare parts and when requesting additional technical information.

▶ Enter the information of your machine into the following table:

Item	Designation	Your information
1	Group and type	
2	Construction year	
3	Machine no.	
4	Version no.	
5	Item no.	

3 Safety

3.1 Principle

State of the art

This machine has been constructed with state-of-the-art technology according to the recognized rules of safety. Nevertheless, when used improperly, dangers to the life and limb of the operator or to third persons or damage to the machine or other materials cannot be excluded.

Proper use

The machine must only be used for the following purposes:

- Compaction of soils.

The machine may not be used for the following purposes:

- Compaction of intensely cohesive soils.
- Compaction of frozen soils.
- Compaction of hard, non-compactable soils.
- Compaction of soils that are not capable of bearing a load.
- Compaction of asphalt.
- Shaking in of paving stones.

Its proper use also includes the observance of all instructions contained in this operator's manual as well as complying with the required service and maintenance instructions.

Any other use is regarded as improper. Any damage resulting from improper use will void the warranty and the liability on behalf of the manufacturer. The operator assumes full responsibility.

Structural modifications

Never attempt to modify the machine without the written permission of the manufacturer. To do so will endanger your safety and the safety of other people! In addition, this will void the warranty and the liability on behalf of the manufacturer.

Especially the following are cases of structural modifications:

- Opening the machine and the permanent removal of components from Wacker Neuson.
- Installing new components which are not from Wacker Neuson and not equivalent to the original parts in design and quality.
- Installation of accessories which are not from Wacker Neuson.

It is no problem to install spare parts from Wacker Neuson.

It is no problem to install accessories that are available in the Wacker Neuson product range of your machine. Please refer to the installation regulations in this operator's manual.

Requirements for operation

The ability to operate the machine safely requires:

- Proper transport, storage and setup.
- Careful operation.
- Careful service and maintenance.

Operation

Operate the machine only as intended and only when in proper working condition.

Operate the machine in a safety-conscious manner with all safety devices attached and enabled. Do not modify or disable any safety devices.

Before starting operation, check that all control and safety devices are functioning properly.

Never operate the machine in a potentially explosive environment.

Supervision

Never leave the machine running unattended!

Maintenance

Regular maintenance work is required in order for the machine to operate properly and reliably over time. Failure to perform adequate maintenance reduces the safety of the machine.

- Strictly observe the prescribed maintenance intervals.
- Do not use the machine if it requires maintenance or repairs.

Malfunctions

If a malfunction occurs, the machine must be secured immediately.

Eliminate the malfunctions that impair safety immediately!

Have damaged or defective components replaced immediately!

For further information, refer to chapter *Troubleshooting*.

Spare parts, accessories

Use only spare parts from Wacker Neuson or such that are equivalent to the original parts in design and quality.

Only use accessories from Wacker Neuson.

Non-compliance will exempt the manufacturer from all liability.

Exclusion of liability

Wacker Neuson will refuse to accept liability for injuries to persons or for damage to materials in the following cases:

- Structural modifications.
- Improper use.
- Failure to comply with this operator's manual.
- Improper handling.
- Using of spare parts which are not from Wacker Neuson and not equivalent to the original parts in design and quality.
- Using of accessories which are not from Wacker Neuson.

Operator's manual

Always keep the operator's manual near the machine or near the worksite for quick reference.

If you have misplaced the operator's manual or require an additional copy, contact your Wacker Neuson representative or download the operator's manual from the Internet (www.wackerneuson.com).

Always hand over this operator's manual to other operators or to the future owner of the machine.

Country-specific regulations

Observe the country-specific regulations, standards and guidelines in reference to accident prevention and environmental safety, for example those pertaining to hazardous materials and wearing protective gear.

Complement the operator's manual with additional instructions taking into account the operational, regulatory, national or generally applicable safety guidelines.

Operator's controls

Always keep the operator's controls of the machine dry, clean and free of oil or grease.

Operating elements such as ON/OFF switch, gas handles etc. may not be locked, manipulated or changed without authorization.

Cleaning

Always keep the machine clean and be sure to clean it each time you have finished using it.

Do not use gasoline or solvents. Danger of explosion!

Do not use high pressure washers. Permeating water can damage the machine. When electrical equipment is present, this can pose a serious injury risk from electric shocks.

Checking for signs of damage

Inspect the machine when it is switched off for any signs of damage at least once per work shift.

Do not operate the machine if there is visible damage or defects.

Have any damage or defects eliminated immediately.

3.2 Qualification of the operating personnel

Operator qualifications

Only trained personnel are permitted to start and operate the machine. The following rules also apply:

- You are at least 18 years of age.
- You are physically and mentally fit.
- You have received instruction on how to independently operate the machine.
- You have received instruction in the proper use of the machine.
- You are familiar with required safety devices.
- You are authorized to start machines and systems in accordance with the standards governing safety.
- Your company or the operator has assigned you to work independently with this machine.

Incorrect operation

Incorrect operation or misuse by untrained personnel can endanger the health and safety of the operator or third persons and also cause machine and material damage.

Operating company responsibilities

The operating company must make the operator's manual available to the operator and ensure that the operator has read and understood it.

Work recommendations

Please observe the recommendations below:

- Work only if you are in a good physical condition.
- Work attentively, particularly as you finish.
- Do not operate the machine when you are tired.
- Carry out all work calmly, circumspectly and carefully.
- Never operate the machine under the influence of alcohol, drugs or medication. This can impair your vision, reactions and your judgment.
- Work in a manner that does not endanger others.
- Ensure that no persons or animals are within the danger zone.

3.3 Protective gear

Work clothing

Clothing should be appropriate, i.e. should be close-fitting but not restrict your movement.

When on construction sites, do not wear long hair loosely, loose clothing or jewelry including rings. These objects can easily get caught or be drawn in by moving machine parts.

Only wear clothing made of material that is not easily flammable.

Personal protective gear

Wear personal protective gear to avoid injuries or health hazards:

- Non-skid, hard-toed shoes.
- Work gloves made of durable material.
- Overalls made of durable material.
- Hard hat.
- Ear protection.

Ear protection

This machine generates noise that exceeds the country-specific permissible noise levels (individual rating level). It may therefore be necessary to wear ear protection. You can find the exact value in the chapter *Technical Data*.

When wearing ear protection while working, you must pay attention and exercise caution because your hearing is limited, e.g. in case someone screams or a signal tone sounds.

Wacker Neuson recommends that you always wear ear protection.

3.4 Transport

Turning off the engine and deactivating the machine

Always turn off the engine and deactivate the machine before transport.

Let engine cool off.

Observing hazardous materials regulations

Observe the national safety guidelines and the hazardous materials regulations that apply to the respective means of transportation.

Lifting

When lifting the machine, observe the following instructions:

- Designate a skilled person to guide you for the lifting procedure.
- You must be able to see or hear this person.
- Use only suitable and certified hoisting gear, lifting tackle and load-bearing equipment with sufficient lifting capacities.
- Only use the attachment points described in the operator's manual.
- Attach the machine securely to the hoisting gear.
- Ensure that no one is nearby or under the machine.
- Do not climb onto the machine.

Loading the machine

Loading ramps must be able to bear the load and be in a stable position.

Make sure that no one can be endangered if the machine slips away or tips over or if machine parts suddenly move upward or downward.

Put the operating controls and moving parts in their transport position.

Secure the machine with load-securing straps so that it cannot tip over, fall down or slide away. Only use the attachment points described in the operator's manual.

Transport vehicle

Use only suitable transport vehicles with sufficient load-carrying capacity and suitable tie-down lugs.

Transporting the machine

Secure the machine on the transport device against tilting, falling or slipping.

Only use the lashing points listed in the operating instructions.

Also observe the country-specific regulations, standards and guidelines.

Restarting

Machines, machine parts, accessories or tools that were detached for transport purposes must be re-mounted and fastened before restarting.

Only operate in accordance with the operating instructions.

3.5 Operating safety

Explosible environment

Never operate the machine in a potentially explosive environment.

Work environment

Familiarize yourself with your work environment before you start work. This includes e.g. the following items:

- Obstacles in the work and traffic area.
- Load-bearing capacity of the ground.
- The measures needed to cordon off the construction site from public traffic in particular.
- The measures needed to secure walls and ceilings.
- Options available in the event of an accident.

Safety in the work area

When working with the machine especially pay attention to the following points:

- Electric lines or pipes in work area.
- Gas lines or water lines in the work area.

Starting the machine

Observe the safety information and warning notices located on the machine and in the operator's manual.

Never attempt to start a machine that requires maintenance or repairs.

Start the machine as directed in the operator's manual.

Vertical stability

Always ensure that the machine is vertically stable and cannot tip over, roll or slide away.

Proper operator position

Do not leave the proper operator position while operating the machine.

The intended operator position is behind the machine at a distance of at least 5 m.

Only if you operate the machine with the speed controller function switched on, do you need to guide the machine from behind by means of the handle.

Leaving the danger area

Injury may be caused by moving machines or flying materials.

Ensure that operators and other persons observe a minimum safety distance of 2 m from the machine.

Caution with movable parts

Keep your hands, feet and loose clothing away from moving or rotating machine parts. Parts of your body being pulled in or crushed can cause serious injuries.

Turning off engine and deactivating machine

Turn off the engine and deactivate the machine and remote control in the following situations:

- Before breaks.
- If you are not using the machine.

Store the machine in such a way that it cannot tilt, fall or slip.

Storage location

After operation, allow the machine to cool and then store it in a sealed-off, clean and dry location protected against frost and inaccessible to children.

Not using starter sprays

Highly flammable starter sprays pose a fire hazard.

Do not use any starter sprays.

Starter sprays are highly flammable and can cause backfiring and engine damage.

3.6 Safety during the operation of vibratory plates

Belt guard

Never operate the machine without a belt guard!

Exposed belts and belt pulleys are dangerous and can cause serious injuries if they pull in any part of your body or if parts are ejected.

Danger of falling over

Operate the machine so that it cannot tip over or fall down from bordered areas, edges and steps.

Load-carrying capacity of the ground

Keep in mind that the load-carrying capacity of the earth to be compressed or bed can be greatly reduced by the effects of vibration, for example near slopes.

Avoiding crushing

When operating the machine, pay particular attention to avoid being squeezed between the machine and an obstacle. Always look in the direction of travel!

Compacting on slopes

The following points must be observed if you plan to compact inclined surfaces (slopes, escarpments):

- Always stand above the machine on a slope.
- Start at the bottom of a slope (slopes that can be easily managed in an upward direction can be safely traveled in a downward direction also).
- Never stand in a position where the machine could possibly fall. A slipping or tipping machine can cause serious injuries.

Not exceeding the maximum tilt position

- Do not exceed the maximum tilt position (see chapter *Technical Data*).
- Only operate the machine at maximum tilt for short periods of time.

If you exceed the maximum tilt, the engine lubrication system will fail and thus inevitably damage important engine parts.

Checking the effects of vibration

Compacting work in the vicinity of buildings can lead to structural damage. For this reason you must always check the possible effects of vibrations on surrounding buildings in the run-up to work.

You must take the following points into special consideration when evaluating the effects of vibration:

- Vibration behavior, sensitivity and resonance frequency of surrounding buildings.
- Distance of the buildings from the vibrationsite (= worksite).
- Condition of the soil.

You may need to carry out measurements to determine the vibration speed.

You must also comply with the relevant guidelines and regulations, particularly DIN 4150-3.

The foundation must also have sufficient load-bearing capacity to withstand the compaction energy. In case of doubt involve a soil mechanics specialist in the evaluation.

Wacker Neuson is not liable for any structural damage.

3.7 Safety when operating remote-controlled machines

Keeping remote control and receiver units clean

Always keep the remote control and receiver units of the machine dry, clean and free of oil or grease.

The remote control and receiver units must be uncovered, and nothing may be glued onto them.

Maintaining visual contact at all times

Always aim the remote control directly at the machine during operation and maintain visual contact at all times.

Infrared signals can be reflected.

Under certain circumstances the machine can also be moved by pressing the control lever and not aiming the remote control directly at the machine.

Using different transmission channels

In order to avoid unintentionally controlling other machines within the receiving area, the machines must not be set to the same transmission channel. Risk of serious injury due to crushing.

Set different transmission channels if required.

3.8 Safety during the operation of combustion engines

Checking for signs of damage

Check the engine while switched off for leaks and cracks in the fuel line, tank and fuel cap at least once per work shift.

Do not operate the machine if there is visible damage or defects.

Have any damage or defects eliminated immediately.

Dangers during operation

Combustion engines can be dangerous, particularly during operation and when refueling.

Read and follow all safety instructions. Otherwise there is a risk of personal injury and/or damage to property!

Do not start the engine near spilt fuel or if you smell fuel – this may cause an explosion!

- Remove the machine from such areas.
- Remove the spilt fuel immediately!

Not changing the engine speed

Do not change the preset engine speed, as this may cause engine damage.

Preventing fires

Open flames and smoking are strictly prohibited in the immediate vicinity of the machine.

Make sure that waste, such as paper, dry leaves or grass do not accumulate around the exhaust muffler. The waste materials may ignite.

Safety precautions when refueling

Please observe the following safety-relevant instructions when refueling:

- Do not refuel near open flames.
- Do not smoke.
- Turn off the engine before refueling and allow it to cool down.
- Refuel in a well-ventilated environment.
- Wear fuel-proof protective gloves and, if there is the possibility of spraying, protective goggles and clothing.
- Do not inhale fuel vapors.
- Avoid skin and eye contact with fuel.
- For refueling, use clean tools such as a hopper.
- Do not spill fuel, especially onto hot parts.
- Remove any spilt fuel immediately.
- Use the correct fuel grade.
- Do not mix fuel with other liquids.
- Fill the tank only up to the maximum marking. If there is no Maximum marking, do not fill up the tank completely.
- Lock the fuel cap securely after refueling.

Operation in closed rooms

In closed or partially closed rooms such as tunnels, drifts or deep trenches, ensure sufficient ventilation and extraction by, for example, providing a powerful exhaust air fan.

Danger of poisoning! Do not inhale exhaust fumes. They contain toxic carbon monoxide that can lead to unconsciousness or death.

Caution with hot parts

Do not touch any hot parts such as the engine block or exhaust muffler during operation or directly afterwards. These parts can become very hot and cause severe burns.

Cleaning the engine

Clean the engine when it is cool to remove any dirt.

Do not use gasoline or solvents. Danger of explosion!

3.9 Safety during the operation of hydraulic machines

Hydraulic oil

Hydraulic oil is harmful to health.

Wear safety glasses and safety gloves when handling hydraulic oil.

Avoid direct skin contact with hydraulic oil. Remove hydraulic oil from the skin immediately with soap and water.

Make sure that no hydraulic oil comes gets in the eyes or on the body. See a physician immediately if hydraulic oil gets into the eyes or is swallowed.

Do not eat and drink while handling hydraulic oil.

Make sure to have extreme cleanliness. Contamination of the hydraulic oil with dirt or water can cause premature wear or failure of the machine.

Dispose of left over and spilled hydraulic oil according to the applicable regulations for environmental protection.

3.10 Maintenance

Maintenance work

Service and maintenance work must only be carried out to the extent described in these operating instructions. All other procedures must be performed by your Wacker Neuson representative.

For further information, refer to chapter *Maintenance*.

Turning off the engine and deactivating the machine

Turn off the engine and deactivate the machine before performing service or maintenance work.

Let the machine cool off.

Disconnecting the battery

For machines with electric starter, you must disconnect the battery before working on the electronic parts.

Using only a Wacker Neuson battery

Use only Wacker Neuson batteries to replace defective batteries, see chapter *Technical Data*.

Only the Wacker Neuson battery is vibration resistant and thus suitable for the high vibratory stresses.

Working on the battery

Always take the following safety measures when working with the battery:

- No fire, sparks, or smoking while working with batteries.
- Batteries contain corrosive acid. Use acid-proof protective gloves and protective goggles when working with batteries.
- Avoid short circuits due to improper connection or bypassing with tools.
- Disconnect the negative terminal first when disconnecting the battery.
- Connect the positive terminal first when connecting the battery.
- Re-fasten terminal covers after connecting the battery.

Assembling safety devices

If it was necessary to dismantle safety devices, they must be reassembled and checked immediately after completing maintenance work.

Always tighten loosened screw connections, complying with prescribed starting torque.

Handling operating fluids safely

Observe the following points when handling operating fluids, e.g. fuels, oils, greases, coolants etc.:

- Always wear personal safety clothing.
- Avoid skin and eye contact with operating fluids.
- Do not inhale or swallow operating fluids.
- In particular, avoid contact with hot operating fluids. Burn and scalding hazard.
- Dispose of replaced or spilled operating fluids according to the applicable regulations for environmental protection.
- If operating fluids escape from the machine, cease operation of the machine and have it repaired immediately by your Wacker Neuson representative.

3.11 Safety and information labels

Your machine has adhesive labels containing the most important instructions and safety information.

- Make sure that all the labels are kept legible.
- Replace any missing or illegible labels.

  The item numbers for the labels are in the parts book.

Safety and information labels on the machine

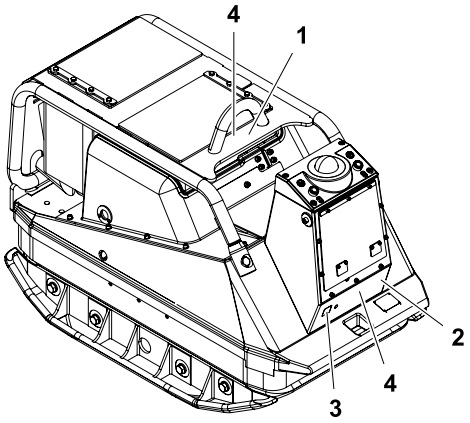

Pos.	Aufkleber	Beschreibung
1		If the machine falls, it can cause severe crushing injuries. ▶ Only lift the machine with certified hoist and lifting tackle (safety load hook). ▶ Do not lift the machine with the excavator shovel by the central suspension. ▶ Do not lift the machine with a forklift by the central suspension.
2		Wear personal protective gear to avoid injuries or health hazards: ■ Ear protection. Read the operator's manual before start-up.
3		Guaranteed sound power level.
4	US machines 	Warning

Safety and information labels on the remote control

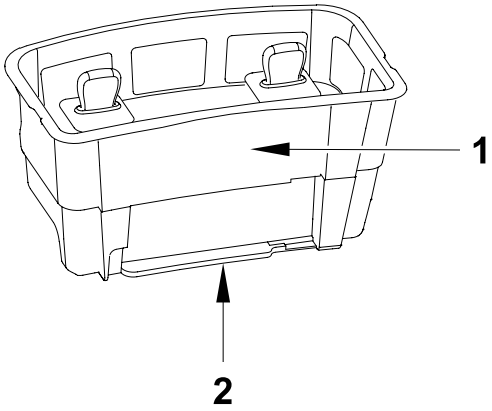

Item	Label	Description
1	US machines 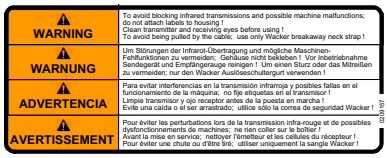 WARNING To avoid blocking infrared transmissions and possible machine malfunctions; do not attach labels to housing ! Clean transmitter and receiving eyes before using ! To avoid being pulled by the cable; use only Wacker breakaway neck strap ! WARNUNG Um Störungen der Infrarot-Übertragung und mögliche Maschinen-Fehlfunktionen zu vermeiden; Gehäuse nicht bekleben ! Vor Inbetriebnahme Sendegerät und Empfängerauge reinigen ! Um einen Sturz oder das Mitreißen zu vermeiden; nur den Wacker Auslöseschuttergurt verwenden ! ADVERTENCIA Para evitar interferencias en la transmisión infrarroja y posibles fallas en el funcionamiento de la máquina; no fije etiquetas en el transmisor ! Limpie transmisor y ojo receptor antes de la puesta en marcha ! Evite una caída o el ser arrastrado; utilice sólo la correa de seguridad Wacker ! AVERTISSEMENT Pour éviter les perturbations lors de la transmission infra-rouge et de possibles dysfonctionnements de machines; ne rien coller sur le boîtier ! Avant la mise en service; nettoyer l'émetteur et les cellules du récepteur ! Pour éviter une chute ou d'être tiré; utiliser uniquement la sangle Wacker ! 02/09/161	To avoid blocking infrared transmissions and possible machine malfunctions; do not attach labels to housing. Clean transmitter and receiving eyes before using! To avoid being pulled by the cable; use only Wacker breakaway neck strap!
	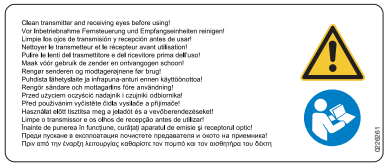 Clean transmitter and receiving eyes before using! Vor Inbetriebnahme Fernsteuerung und Empfangseinheiten reinigen! Limpie los ojos de transmisión y recepción antes de usar! Nettoyer le transmetteur et le récepteur avant utilisation! Puliire le lenti del trasmettitore e del ricevitore prima dell'uso! Maak vóór gebruik de zender en ontvanggen schoon! Rengør senderen og modtagerejnene før brug! Puhdista lähetysliste ja infrapuna-anturi ennen käyttöönottoa! Rengör sändare och mottagarlins före användning! Przed użyciem oczyścić nadajnik i czujniki odbiornika! Před použitím vyčistěte čočky vysílače a přijímače! Használat előtt tisztítsa meg a jeladót és a vevőberendezéseket! Limpe o transmissor e os olhos de recepção antes de utilizar! Înainte de punerea în funcțiune, curățați aparatul de emisie și receptorul optic! Преди пускане в експлоатация почистете предавателя и окото на приемника! Πριν από την έναρξη λειτουργίας καθαρίστε τον πομπό και τον αισθητήρα του δέκτη 02/09/161	Clean transmitter and receiving eyes before using!
2	US machines 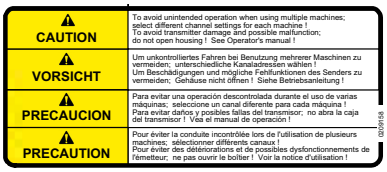 CAUTION To avoid unintended operation when using multiple machines; select different channel settings for each machine ! To avoid transmitter damage and possible malfunction; do not open housing ! See Operator's manual ! VORSICHT Um unkontrolliertes Fahren bei Benutzung mehrerer Maschinen zu vermeiden; unterschiedliche Kanaladressen wählen ! Um Beschädigungen und mögliche Fehlfunktionen des Senders zu vermeiden; Gehäuse nicht öffnen ! Siehe Betriebsanleitung ! PRECAUCION Para evitar una operación descontrolada durante el uso de varias máquinas; seleccione un canal diferente para cada máquina ! Para evitar daños y posibles fallas del transmisor; no abra la caja del transmisor ! Vea el manual de operación ! PRECAUTION Pour éviter la conduite incontrôlée lors de l'utilisation de plusieurs machines; sélectionner différents canaux ! Pour éviter des détérorations et de possibles dysfonctionnements de l'émetteur; ne pas ouvrir le boîtier ! Voir la notice d'utilisation ! 02/09/158	To avoid unintended operation when using multiple machines; select different channel settings for each machine! To avoid transmitter damage and possible malfunction; do not open housing! See Operator's manual!

3.12 Safety devices

WARNING
Danger of injury due to open moving parts.
- ▶ Only operate the machine with properly installed and functioning safety devices.
- ▶ Do not modify or remove safety devices.

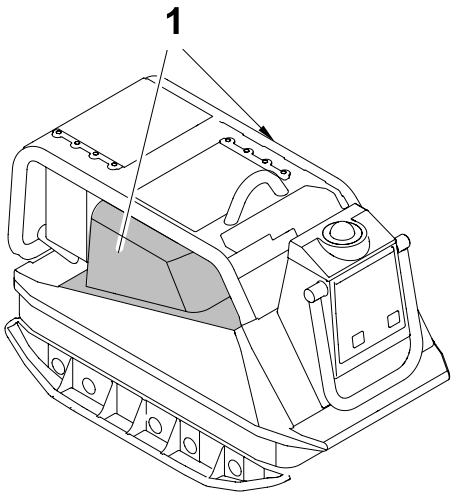

Item	Designation
1	Protective hood

Safety shutdown of the machine

The machine is operated using an infrared remote control, and will stop vibration and movement for safety reasons in the following situations:

- When the operator comes near the machine (approx. 1-2 m from a receiver unit).
- When the user leaves the receiving area (a maximum of 20 m from the machine).
- If visual contact between the remote control and the machine's receiver unit is obstructed.
- Failure of the power supply of the remote control or the machine.

Note: Only for certain machine types:
The machine does not switch off vibration and movement, if you enter the proximity area with the speed control unit switched on.

4 Scope of delivery

The machine is delivered fully assembled and after unpacking it is ready for operation.

The scope of delivery includes:

- Machine.
- Remote control.
- Charger.
- Operator's manual.
- Parts book.

5 Structure and function

5.1 Application

Use the machine only as intended, see chapter *Safety*, *Proper use*.

5.2 Description

5.2.1 Principle of the machine

The machine consists of an upper mass with a drive engine and a base plate with vibrator.

The drive engine drives the vibrator by means of a V-belt.

The vibrator causes vibrations, causing the machine to vibrate, thus compacting the soil.

5.2.2 Remote control

The machine is controlled by remote control only.

The remote control commands are transmitted to the machine via infrared signal within the receiving area.

For trouble-free transmission of the infrared signal, always aim the remote control directly at the machine's receiver unit.

The following commands can be sent via remote control:

- Start the engine.
- Move the machine with simultaneous vibration.
- Switch off the engine.
- Switch speed control unit on and off (only certain machine types).

5.2.3 Infrared system

If you press a control lever or button on the remote control, the remote control will transmit an infrared signal to the machine's receiver unit.

The machine's receiver unit converts the infrared signal into an electronic signal. The electronic signal is then processed by the controller, which controls the machine in accordance with the command.

In order for the machine to be able to execute the commands, the remote control and the machine must be set to the same transmission channel.

You can set the transmission channel on the remote control and on the decoder.

If you would like to operate several remote-controlled machines in close proximity, the machines must be set to different transmission channels.

5.2.4 Receiving area and proximity area of the machine

For safety reasons, the infrared signal can only be transmitted within certain specific areas.

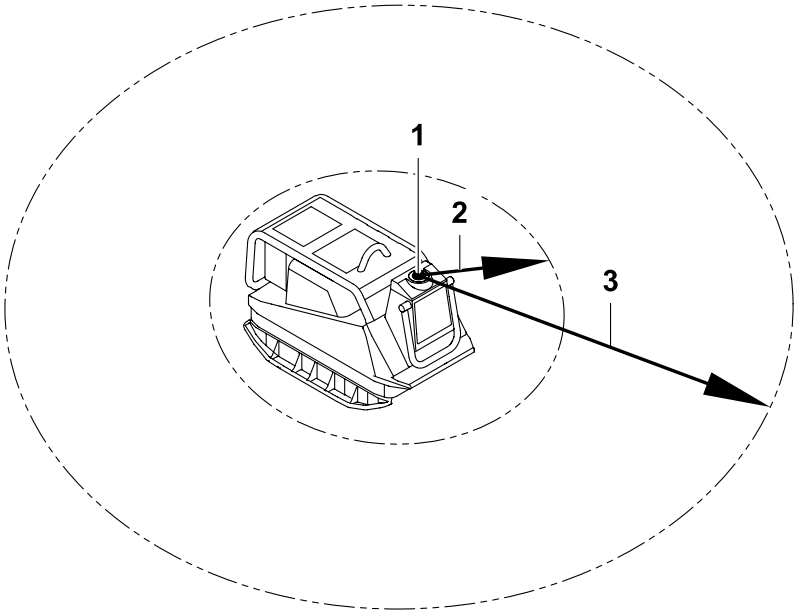

Item	Designation	Item	Designation
1	Receiver unit	3	Receiving area
2	Proximity area		

Receiving area

The machine can only be operated within the receiving area. The receiving area is a maximum of 20 m from one of the machine's receiver units.

Within the receiving area, visual contact must always be maintained between the remote control and the machine. If there is no visual contact, the machine will stop vibrating and moving.

If you are outside of the receiving area, the machine will not receive commands. The machine will stop vibrating and moving.

Proximity area

If the machine comes closer than approx. 1–2 m (proximity area) to the operator, the machine will stop vibrating and moving. The machine will be able to receive commands again once the operator leaves the proximity area.

If the operator is closer than approx. 1–2 m to the side of the machine or the infrared signals of the remote control are transmitted by reflection, it is **not** guaranteed that vibration and movement will stop. Risk of serious injury due to crushing.

If other persons come closer than approx. 1–2 m (proximity area) to the machine, the machine will **not** stop vibrating and moving. Shutdown in the proximity area will only function in combination with the remote control. Risk of serious injury due to crushing.

Follow the following instructions when working with the machine:

- Operate the machine from behind it and observe a minimum safety distance of 2 m.
- Ensure that no persons are in the proximity area or work area of the machine. Risk of serious injury due to crushing.

5.2.5 Speed control unit (only certain machine types)

The speed control unit is a special function by means of which the machine automatically advances for 30 seconds.

In this operating state you must guide the machine by means of the handle.

5.3 Functional description

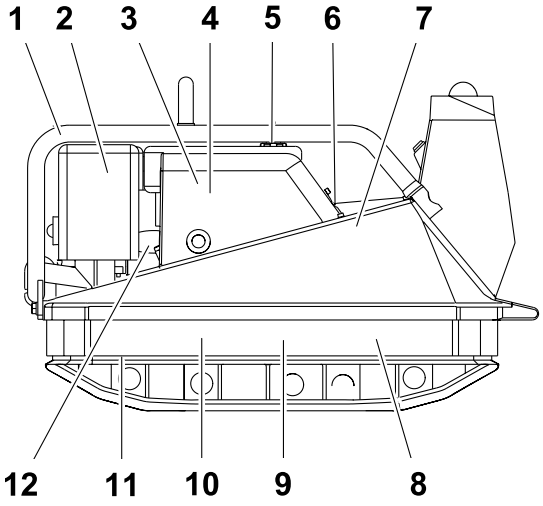

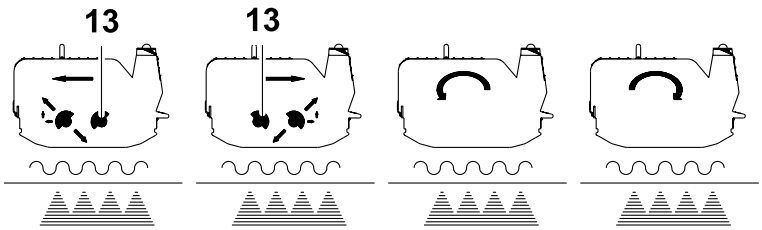

Item	Designation	Item	Designation
1	Protective frame	8	Base plate
2	Air cleaner	9	Exciter
3	V-belt pulley	10	V-belt
4	Centrifugal clutch	11	Vibration dampers
5	Starter	12	Drive engine
6	Battery	13	Eccentric weight
7	Upper mass with drive engine		

The exciter of the base plate generates the vibration necessary for ground compaction.

The swing direction can be changed by twisting the eccentric weights. This enables a continuous transition between vibration in forward motion or backward motion, and a turning of the machine to the left or right.

The air-cooled drive engine attached to the upper mass powers the exciter. The torque is transferred non-positively by the centrifugal clutch and the V-belt.

The V-belt pulley combined with the centrifugal clutch provides for an optimum tension of the V-belt during operation and for the slackening of the V-belt during lifting of the machine.

In accordance with the wear on the V-belt edges, the V-belt pulley adjusts itself automatically.

The upper mass and base plate are connected to each other via four vibration-damping vibration dampers. The vibration dampers prevent a transfer of the very high vibrations of the base plate to the upper mass.

The machine is equipped with a start repeat block.

To facilitate the starting procedure (in the event of great cold), the drive engine is equipped with automatic decompression.

The machine is controlled by remote control only.

6 Components and operator's controls

6.1 Components and operator's controls of the machine

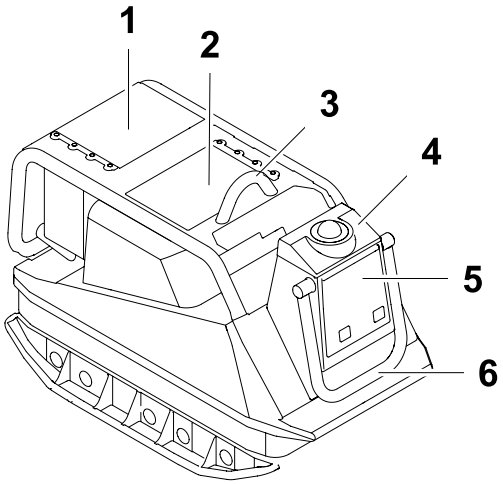

Item	Designation	Item	Designation
1	Cover (air cleaner)	4	Control panel
2	Cover (oil and fuel)	5	Cover (coiled helix cable)
3	Central suspension	6	Handle

Central suspension

The central suspension allows the machine to be lifted for transport.

Handle (only certain machine types)

For machines with speed control unit, the handle is used for the exact guidance of the machine.

Coiled helix cable

The coiled helix cable allows for the following functions:

- Recharge remote control battery.
- Operate the machine while simultaneously charging the remote control battery.

Control panel

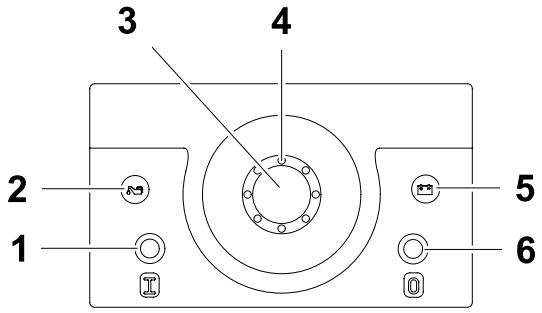

Item	Designation	Item	Designation
1	ON switch	4	LED ring
2	Oil pressure control lamp	5	Charging control lamp
3	Receiver unit	6	OFF switch

ON switch

The ON switch activates the machine for startup with the remote control.

Oil pressure control lamp

The *Oil pressure* control lamp indicates whether the oil pressure is sufficient.

- The *Oil pressure* control lamp is lit in red when the machine is activated and during automatic startup.
- The *Oil pressure* control lamp extinguishes when the engine is running.
- The *Oil pressure* control lamp is lit in red when the oil pressure is too low.

Receiver unit

The receiver unit complete with LED ring is located on the control panel. The receiver unit receives the infrared signals of the remote control.

LED ring

The LED ring indicates the current operating condition of the machine via light and flashing signals:

- If the machine is activated, the LED ring is lit.
- The LED ring flashes, if the machine is activated and the remote control switched on, and if there is reception.
- The LED ring flashes fast if the operator enters the proximity area, or if the speed control unit is switched on.

Charging control lamp

The *Charging* control lamp indicates if the machine's battery is being charged.

- The *Charging* control lamp is lit in red if the machine is activated.
- The *Charging* control lamp extinguishes when the engine is running.
- The *Charging* control lamp is lit in red when the machine's battery is no longer being charged.

OFF switch

The OFF switch deactivates the machine completely.

6.2 Remote control components and operator's controls

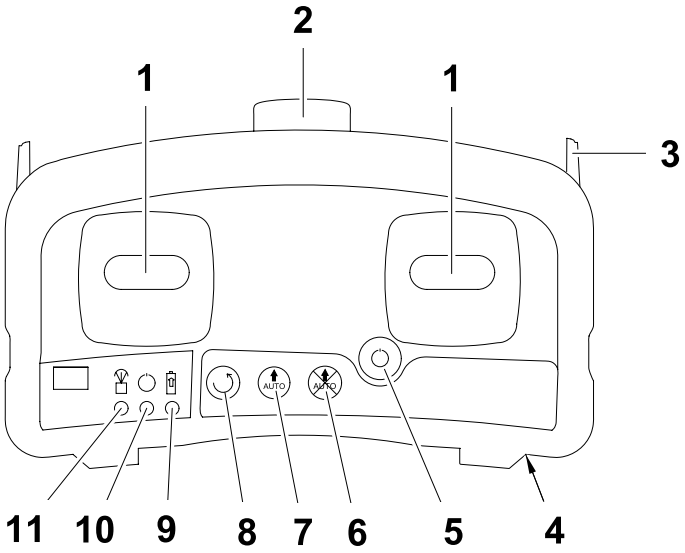

Item	Designation	Item	Designation
1	Control levers (left, right)	7	ON switch of speed control unit
2	Coiled helix cable shorting plug	8	Engine start button
3	Carrying belt	9	Charging control lamp
4	Battery	10	Operation control lamp
5	Remote control ON/OFF switch	11	Diagnostic control lamp
6	OFF switch of speed control unit		

Control levers (left, right)

When a control lever is pressed, vibration starts and the machine moves.

Remote control ON/OFF switch

Turn the remote control on and off with the ON/OFF switch.

The engine is also shut down using the ON/OFF switch.

Engine start button

The start button starts the engine.

ON switch speed control unit (only certain machine types)

If you press the ON switch *speed control unit*, the machine automatically advances for 30 seconds.

OFF switch speed control unit (only certain machine types)

If you press the OFF switch *speed control unit*, the machine stops the automatic advance movement and returns into its normal state of operation.

Carrying belt

The remote control can be hung on the carrying belt.

Battery

The battery supplies the remote control with power.

The battery can be charged with the machine's coiled helix cable or the external charger (accessories).

Control lamps

Charging

- The *Charging* control lamp is lit in green when the battery is charging.
- The *Charging* control lamp extinguishes when the battery is charged.

Operation

- The *Operation* control lamp flashes green when the remote control is turned on.
- The *Operation* control lamp will extinguish once the remote control is turned off.
- The *Operation* control lamp flashes red when the battery is low.
- The *Operation* control lamp is lit in red when the battery is discharged.

Diagnostic

- The *Diagnostic* control lamp briefly flashes green when you move a control lever or press a button on the remote control.

7 Transport

WARNING
Improper handling can result in injury or serious material damage.
- Read and follow all safety instructions of this operator's manual, see chapter *Safety*.

WARNING
Danger due to the machine falling.
If the machine falls, it can cause severe injury such as crushing.
- Only use suitable and tested hoisting gear and lifting tackle (safety load hooks) of sufficient lifting capacity.
- Attach the machine firmly to the hoisting gear.
- Only lift the machine by the central suspension.
- Do not lift the machine with the excavator shovel or the forklift by the central suspension.
- Leave the danger area while lifting.

WARNING
Danger of fire and explosions by fuel.
Any fuel that escapes can ignite and cause severe burns.
- Lift and move the machine in the upright position.

7.1 Lifting eyes and tie-down lugs

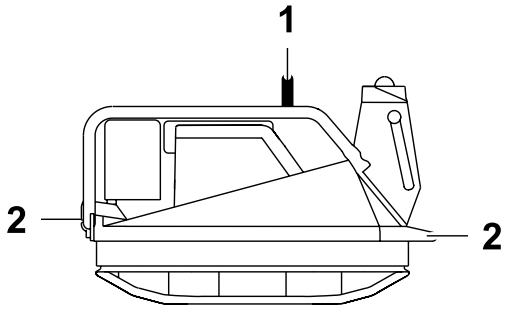

Item	Designation
1	Central suspension (attachment point)
2	Tie-down lugs (2 pieces)

7.2 Lifting the machine by the central suspension and transporting

Performing preparations

1. Place the machine upright on a flat surface.
2. Deactivate the machine.

Lifting the machine by the central suspension and transporting

Note: Designate a skilled person to ensure safety during the lifting procedure.

1. Use suitable lifting tackle at the central suspension.
2. Lift the machine evenly with the hoist.
3. Carefully set the machine down on a suitable transport vehicle.
4. Fasten machine with all tie-down lugs.

8 Initial start up

WARNING
Improper handling can result in injury or serious material damage.
- Read and follow all safety instructions of this operator's manual, see chapter *Safety*.

8.1 Removing/installing support plates

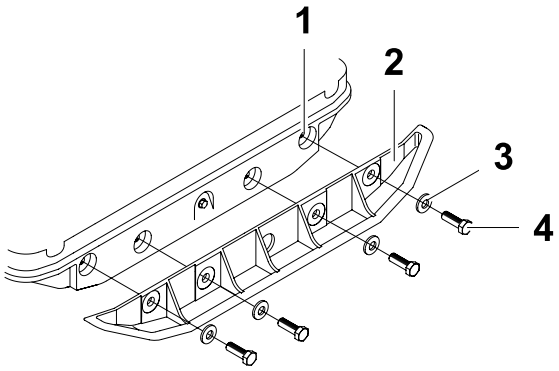

Item	Designation	Item	Designation
1	Threaded bore	3	Disc
2	Support plate	4	Screws

Performing preparations

1. Place the machine upright on a flat surface.
2. Deactivate the machine.
3. Let machine cool off.
4. Fully remove dirt around the area of the support plates.

Removing support plates

1. Unscrew and remove screws with disc.
2. Remove support plate.

Note: If you do not use support plates, fit screws into the threaded bores on the machine in order to protect the threads against contamination and damage.

Installing support plates

- Use screws and discs to screw down support plate.
  Torque 419 Nm.

9 Use and operation

WARNING
Improper handling can result in injury or serious material damage.
- ▶ Read and follow all safety instructions of this operator's manual, see chapter *Safety*.

9.1 Prior to starting the machine

9.1.1 Checks before startup

Checking the machine

Check the following points before beginning work:

- Machine is undamaged.
- Receiver unit is free of dirt.
- Sufficient fuel, see chapter *Maintenance*.
- Sufficient engine oil, see chapter *Maintenance*.
- Air cleaner is free from dirt, see chapter *Maintenance*.

Checking remote control

Check the following points before beginning work:

- Remote control and carrying belt are undamaged.
- Remote control is free of dirt.
- Serial number of the remote control (located under the battery) matches the serial number on the machine.

9.2 Starting up

Activating machine

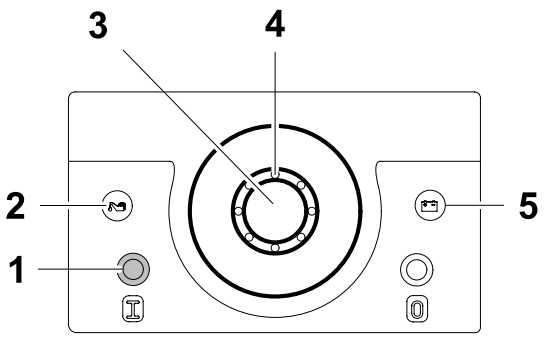

Item	Designation	Item	Designation
1	ON switch	4	LED ring
2	Oil pressure control lamp	5	Charging control lamp
3	Receiver unit		

- Press ON switch on the machine.
  If the LED ring is lit, the machine is ready to operate.

Note: Following activation, the control lamps *Charging* and *Oil Pressure* must light up.

Turning on remote control

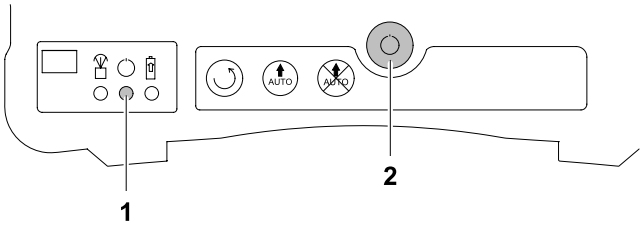

Item	Designation
1	Operation control lamp
2	ON/OFF switch

1. Press ON/OFF switch on remote control.
   The *Operation* control lamp will blink green when the remote control is turned on.

   Note: The *Operation* control lamp is lit or flashes red when the battery needs to be charged.
2. Carry the remote control by means of the carrying belt.

Starting the engine

NOTICE
Starter can be damaged by improper operation.
- ▶ Press start switch only with the engine at a standstill.
- ▶ Release start switch immediately when the engine is running.
- ▶ Abort the start attempt after no more than 15 seconds.
- ▶ Before a renewed start attempt, allow starter to cool down.

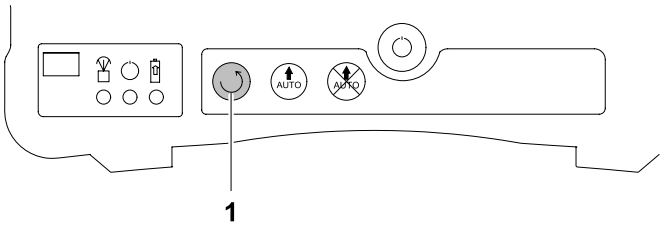

Item	Designation
1	Start button

1. Aim the remote control directly at a receiver unit.
2. Hold the start button on the remote control until the engine starts.

Note: The LED ring on the control panel flashes slowly (operator outside the proximity area) or fast (operator within the proximity area).

9.3 Operating the machine

9.3.1 Machine's directions of movement

The following table shows how the machine moves when you press the respective control lever on the remote control.

Remote control control lever	Machine movement
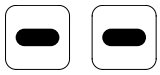	No movement
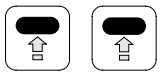	Forward
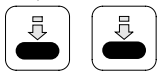	Reverse
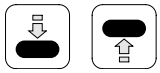	Stand rotation left
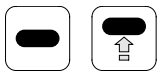	
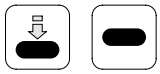	
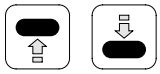	Stand rotation right
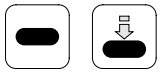	
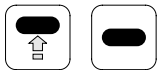	

9.3.2 Note on the machine's directions of movement

The machine's direction of movement is independent of the user's position. Depending on the machine, it will always move in a forward direction when you press the control lever on the remote control **forward**.

WARNING
Getting the movement direction of the machine wrong puts other people at risk of crushing.

- Operate the machine from **behind it** and observe a minimum safety distance of 2 m.
- Ensure that no persons are in the proximity area or work area of the machine.

User behind machine

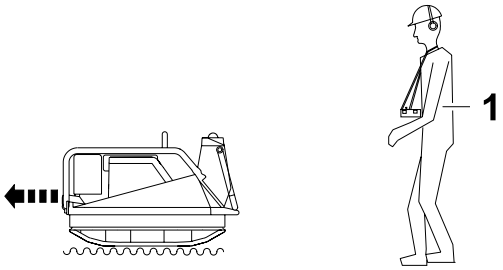

Item	Designation
1	User behind machine

You are behind the machine and press both control levers forward. The machine moves forward and away from you.

User in front of machine

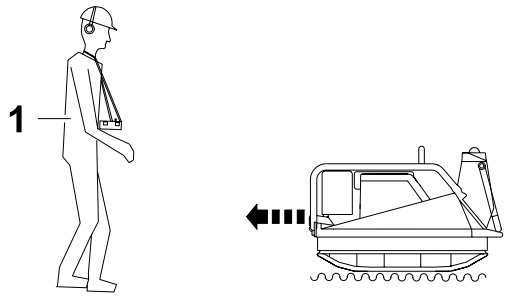

Item	Designation
1	User in front of machine

You are in front of the machine and press both control levers forward.
The machine moves forward and towards you.

Note: The intended operator position is behind the machine.
If, in a particular work situation, you can only operate the machine from the front, keep a sufficient safety distance from the machine.

9.3.3 Compacting on a slope

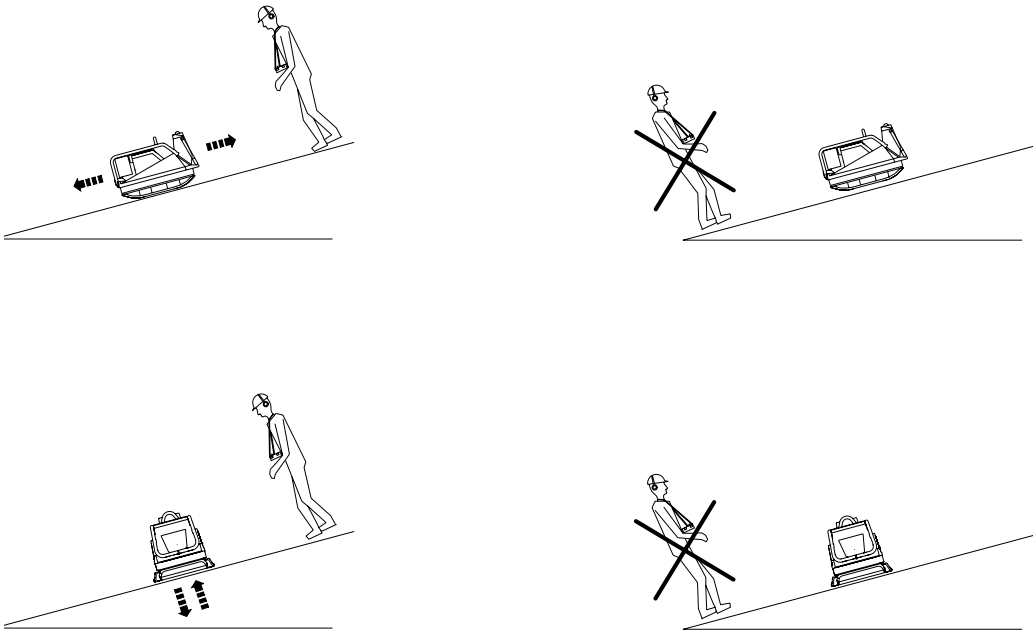

Compacting on slopes

The following points must be observed if you plan to compact inclined surfaces (slopes, escarpments):

- Always stand above the machine on a slope.
- Start at the bottom of a slope (slopes that can be easily managed in an upward direction can be safely traveled in a downward direction also).
- Never stand in a position where the machine could possibly fall.

Not exceeding the maximum tilt position

- Do not exceed the maximum tilt position (see chapter *Technical Data*).
- Only operate the machine at maximum tilt for short periods of time.

If you exceed the maximum tilt, the engine lubrication system will fail and thus inevitably damage important engine parts.

9.3.4 Moving and stopping the machine

Moving the machine

- Press the control levers on the remote control, and hold them in the desired position.
  The machine will start vibrating and move in the desired direction.

Stopping the machine

- Release both control levers on the remote control.
  The machine will stop vibrating and moving.

After approx. 2 seconds, the engine will switch to idling.

9.4 Operate machine with speed control unit (only certain machine types)

Switching on speed control unit

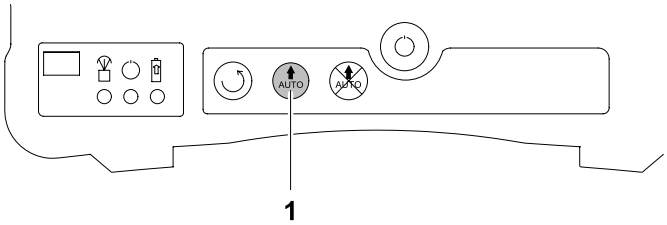

Item	Designation
1	ON switch speed control unit

1. Carry the remote control by means of the carrying belt.
2. ON switch *speed control unit* of the remote control.
   The machine advances automatically for 30 seconds.

Operating machine with speed control unit

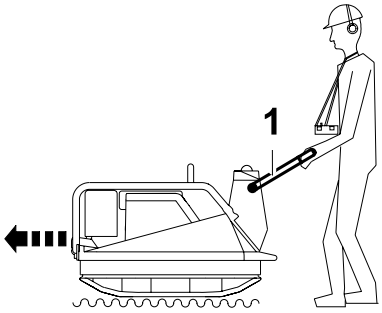

Item	Designation
1	Handle

WARNING
When operator enters the proximity area the machine does not stop automatically.
Risk of injury due to crushing.
- ▶ Guide machine only from behind, using the handle.
- ▶ Ensure that no one is within the danger zone.

- ▶ Guide machine from behind, using the handle.
  Following the 30 seconds, the machine stops vibration and movement and returns into its normal operating state.

Switching off speed control unit

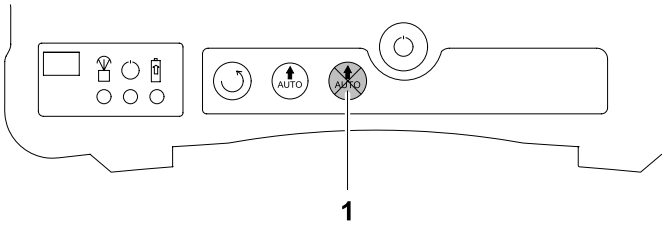

Item	Designation
1	OFF switch speed control unit

- ▶ Press OFF switch *speed control unit* of the remote control.
  The machine stops vibration and movement and returns into its normal operating state.

9.5 Decomissioning

Turning off remote control and engine

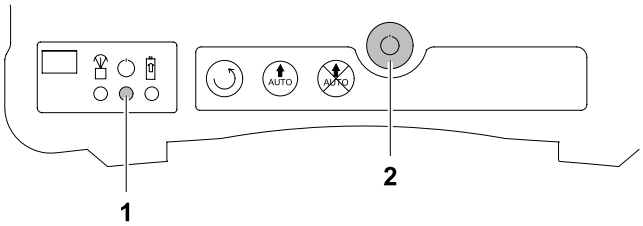

Item	Designation
1	Operation control lamp
2	ON/OFF switch

1. Release both control levers on the remote control.
2. Aim the remote control directly at a receiver unit.

   Note: If you do not aim the remote control directly at the receiver unit, you may only turn off the remote control.
3. Press the ON/OFF switch on the remote control in order to turn off the engine and remote control.
   The *Operation* control lamp will extinguish once the remote control is turned off.

Note: If you do not turn off the remote control, it will automatically turn off after approx. 10 minutes.

Deactivating the machine

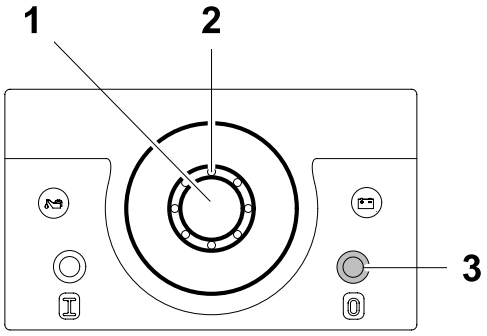

Item	Designation	Item	Designation
1	Receiver unit	3	OFF switch
2	LED ring		

▶ Press the OFF switch on the machine to deactivate the machine.
If the LED ring extinguishes, the machine is deactivated.

Note: If you do not deactivate the machine, it will automatically deactivate after approx. 1 hour.

9.6 Recharging remote control battery

Note: It may not be possible to recharge the battery at temperatures below 0 °C.

9.6.1 Charging the battery with the coiled helix cable

Note: While you are charging the battery with the coiled helix cable, you can continue operating the machine. In this case, feed the coiled helix cable through the recess under the ventilation slots of the rear protective hood and the machine.

Note: While you are charging the battery with the coiled helix cable, you can continue operating the machine.

Removing coiled helix cable

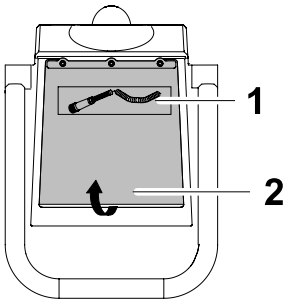

Item	Designation	Item	Designation
1	Coiled helix cable support	2	Cover

1. Fold up cover.
2. Remove the coiled helix cable from the support.

Connecting the coiled helix cable

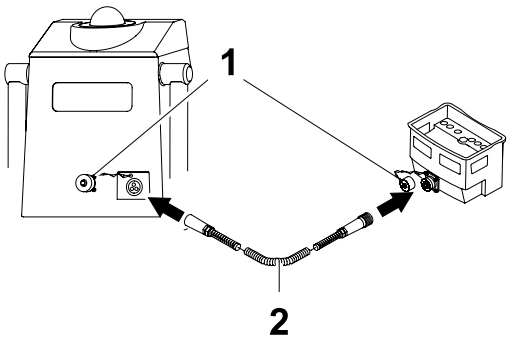

Item	Designation	Item	Designation
1	Shorting plug with sealing cap	2	Coiled helix cable

1. Unscrew the sealing cap from the remote control shorting plug.
2. Unscrew the screwed nose cap from the connection socket of the machine.
3. Connect the coiled helix cable to the remote control shorting plug and screw it on.
4. Connect the other side of the coiled helix cable to the connection socket on the machine and screw it on.
   When the battery is charging, the *Charging* control lamp on the remote control is lit in green.
   When the battery is charged, the *Charging* control lamp on the remote control will go out.

9.6.2 Charging battery with external charger

Removing battery from remote control

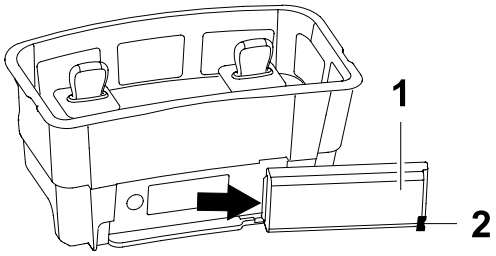

Item	Designation
1	Battery
2	Lug

▶ Press the lug while pulling the battery out to the right.

Charging battery with external charger

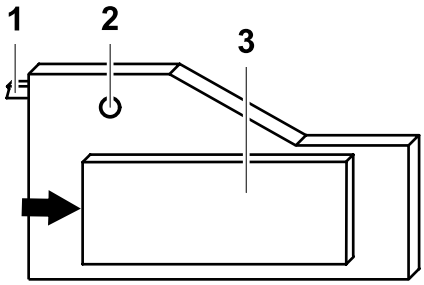

Item	Designation	Item	Designation
1	Connector plug	3	Battery
2	Status control lamp		

Note: Before the first charging, read the charger instructions.

1. Place battery in external charger.
2. Connect the country-specific connecter plug to the charger.
3. Insert the charger plug into the plug receptacle.
   The status control lamp is lit in orange when the battery is charging.
   The status control lamp flashes orange when the battery is charged.
4. Pull the plug from the receptacle when the battery is charged.
5. Remove battery from external charger.

Inserting battery into remote control

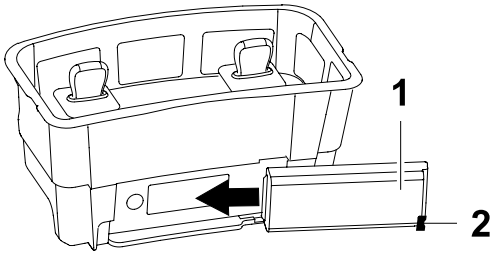

Item	Designation
1	Battery
2	Lug

- ▶ Insert battery into remote control until lug locks into place.

9.7 Setting transmission channel

The machine can only be operated when the transmission channel of the machine is the same as that of the remote control.

16 different transmission channels are available; the channel can be set with a rotary switch on the remote control and on the decoder.

It may be necessary to set the transmission channel in the following cases:

- Operating multiple remote controlled machines within the receiving area.
- If the transmission channel was adjusted on the remote control or the remote control was replaced with another one.

WARNING
Unintentionally controlling multiple machines within the receiving area.
Risk of serious injury due to crushing.
- ▶ Set machines to different transmission channels when operating multiple machines within the receiving area.

Removing battery from remote control

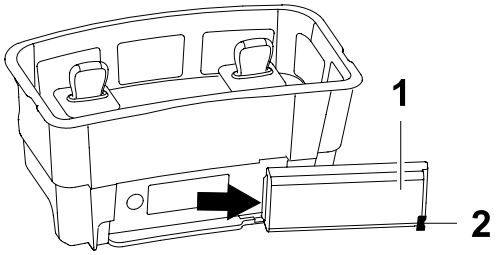

Item	Designation
1	Battery
2	Lug

- Press the lug while pulling the battery out to the right.

Setting transmission channel on the remote control

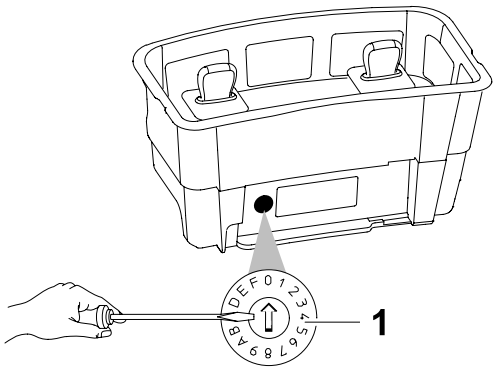

Item	Designation
1	Rotary switch

- Set to one of the 16 transmission channels by turning the switch with a small screwdriver.

Inserting battery into remote control

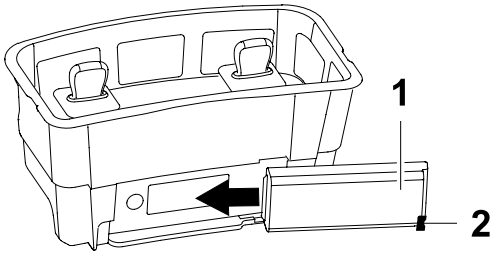

Item	Designation
1	Battery
2	Lug

- Insert battery into remote control until lug locks into place.

Removing decoder

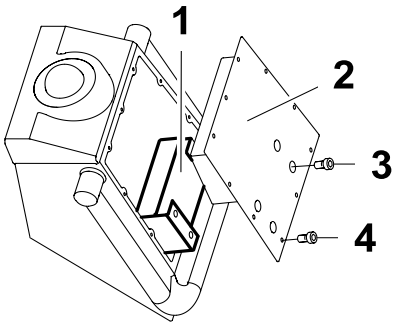

Item	Designation	Item	Designation
1	Decoder	3	Screws (4 pieces)
2	Plate	4	Screws (10 pieces)

1. Unscrew all screws on the plate.
2. Unscrew all screws of the decoder.
3. Remove plate.
4. Fold down decoder until the rotary switch is visible.

Checking and adjusting transmission channel on the decoder

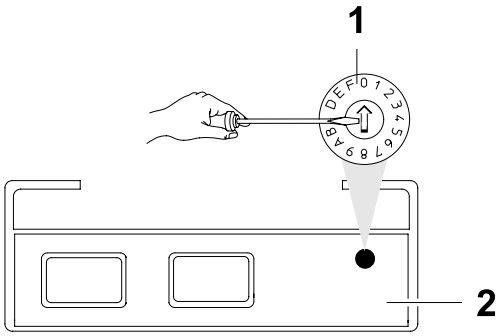

Item	Designation
1	Rotary switch
2	Decoder

- Set to one of the 16 transmission channels by turning the switch with a small screwdriver.
  Transmission channels of decoder and remote control must match.

Installing decoder

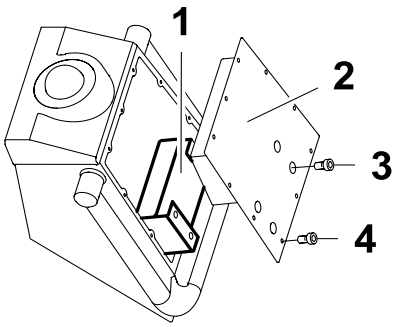

Item	Designation	Item	Designation
1	Decoder	3	Screws (4 pieces)
2	Plate	4	Screws (10 pieces)

1. Fold up decoder.
2. Use all screws to screw decoder onto the plate.
3. Use all screws to screw plate onto the machine.

Checking the transmission channel setting

1. Activate machine.
2. Turn on remote control.
   If the transmission channel of the decoder and remote control match, the LED ring of the receiver unit flashes.
   If the LED ring does not flash, repeat the setting of the transmission channel.

10 Maintenance

WARNING
Improper handling can result in injury or serious material damage.
- Read and follow all safety instructions of this operator's manual, see chapter *Safety*.

WARNING
Danger of poisoning by exhaust fumes.
Exhaust fumes contain toxic carbon monoxide that can lead to unconsciousness or death.
- Only perform maintenance while the engine is turned off and the machine is deactivated.

WARNING
Injury may be caused by uncontrolled startup and moving parts.
- Only perform maintenance while the engine is turned off and the machine is deactivated.

10.1 Maintenance schedule

10.1.1 One-time maintenance after initial operation

Note: The following maintenance tasks need only be performed after initial operation at this interval.

Maintenance work	After the first 20 hours
Change drive motor engine oil and oil filter.	■
Have drive engine valve clearance checked – have them adjusted, if necessary. *	■

* Have these tasks carried out by the service department of your Wacker Neuson contact person.

10.1.2 Daily maintenance tasks

Maintenance work	Daily before operation	Daily after operation
Check machine and remote control for any damage (visual check).	■	
Top up fuel if necessary.	■	
Check oil level – top up engine oil if necessary.	■	
Check air cleaner – clean or replace, if necessary.	■	
Check central suspension for signs of damage. Repair or replace if required. *	■	
Check machine for leaks (visual check): - Fuel system. - Engine. - Hydraulic. - Exciter/base plate.	■	
Clean machine and remote control.		■

* Have these tasks carried out by the service department of your Wacker Neuson contact person.

10.1.3 Regular maintenance

Maintenance work	Monthly	Every 150 hours	Every 250 hours	Every 500 hours	Every 2000 hours
Check that the fastening screws on the protective frame and central suspension are tight - retighten if required. Tightening torque - see replacement parts book.	■				
Check V-belt. If the V-belt width is < 15.5 cm, replace V-belt.	■				
Check hydraulic oil level – replenish if necessary.	■				
Check exciter oil level – fill if necessary.		■			
Change drive motor engine oil and oil filter.		■			
Replace hydraulic filter on the control panel. *			■		
Have exciter oil changed. *			■		
Check battery acid level – replenish with distilled water if necessary.			■		
Check all accessible screwed connections of the drive motor – retighten if necessary. *			■		
Have drive motor valve clearance checked – have them adjusted, if necessary. *			■		
Check injection nozzles. *			■		
Have the fuel filter replaces. *				■	
Check drive motor. *					■

* Have these tasks carried out by the service department of your Wacker Neuson contact person.

Maintenance work	Every 6 years
Have all hydraulic hoses replaced. *	■

* Have these tasks carried out by the service department of your Wacker Neuson contact person.

10.2 Maintenance work

10.2.1 Cleaning machine and remote control

WARNING
Use of improper cleaning agents may lead to fire or explosion.
- ▶ Do not use gasoline or any other solvents to clean components.

Cleaning machine

NOTICE
Permeating water may damage engine or electrical components of the machine.
- ▶ Do not aim water jets at the engine or electrical parts.
- ▶ Do not use high pressure washers or chemical cleaners.

- ▶ Spray off the machine with water.

Cleaning remote control

- ▶ Clean remote control with damp towel.

10.2.2 Topping up with fuel

WARNING
Danger of fire and explosions by fuel and fuel vapors.
- ▶ Do not smoke.
- ▶ Do not refuel near open flames.
- ▶ Turn off the engine before refuelling and allow it to cool down.

CAUTION
Health hazard due to fuel.
- ▶ Refuel in a well-ventilated environment.
- ▶ Do not inhale fuel vapors.
- ▶ Avoid skin and eye contact with fuel.

Performing preparations

1. Place the machine upright on a flat surface.
2. Deactivate the machine.
3. Fold up cover.

Topping up with fuel

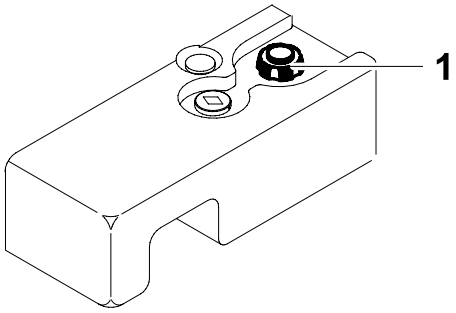

Item	Designation
1	Fuel cap

NOTICE
Contamination in the fuel may damage the fuel injection system and block the fuel filter.
- ▶ Only use pure fuel and clean filling containers.

WARNING
Danger of fire and explosions by fuel and fuel vapors.
- ▶ Do not smoke.
- ▶ Do not refuel near open flames.
- ▶ Turn off the engine before refuelling and allow it to cool down.

1. Remove any dirt around the tank lid.
2. Unscrew and remove the fuel tank lid.
3. Use a clean funnel to replenish fuel.
   See the chapter *Technical data* for the fuel type.
4. Position the fuel cap and tighten it.

10.2.3 Checking motor oil level and topping up engine oil

Performing preparations

1. Place the machine upright on a flat surface.
2. Deactivate the machine.
3. Fold up cover.

Checking engine oil level

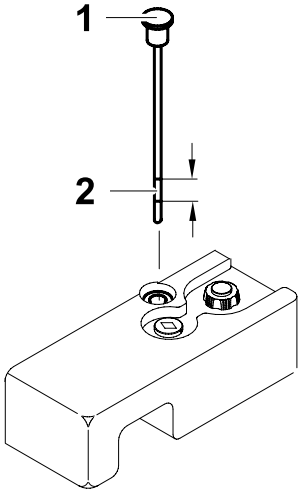

Item	Designation
1	Oil level dipstick
2	Mark

1. Remove any dirt around the oil level dipstick.
2. Pull out dipstick.
3. Wipe off dipstick with dry, lint free towel.
4. Fully insert dipstick.
5. Pull out dipstick.
6. Check whether the oil is between the lower and upper mark on the dipstick.
7. Fully insert dipstick.

Topping up with engine oil

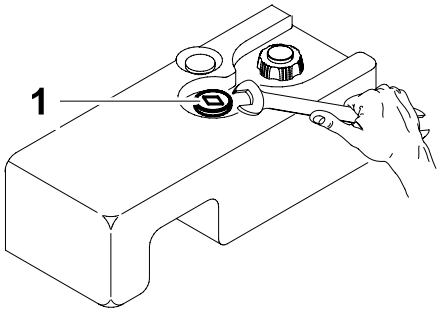

Item	Designation
1	Oil cap

1. Remove dirt around the oil cap.
2. Unscrew and remove oil filler cap.
3. If necessary, pour engine oil into the opening until the upper mark is reached on the oil level dipstick.
   See the chapter *Technical data* for the oil specification.
4. Screw in cover for oil filler cap, and tighten until hand-tight.
5. Wipe off any spilled oil.

10.2.4 Changing the engine oil

Note: Change oil when the engine is lukewarm so that the oil can completely run out.

Performing preparations

1. Place the machine upright on a flat surface.
2. Deactivate the machine.
3. Lay out impermeable sheet over the workspace to protect the ground from the oil.
4. Have a collection container of sufficient size ready.

Draining engine oil

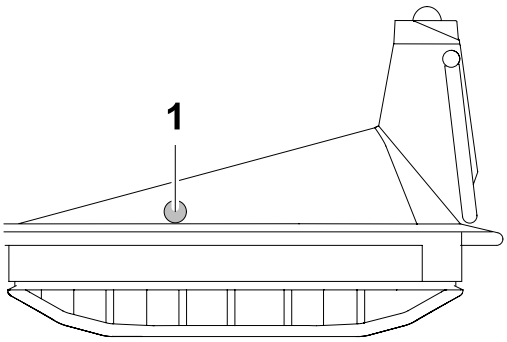

Item	Designation
1	Oil drain plug

1. Place the collection container under the oil drain plug.
2. Unscrew the oil drain plug and remove complete with sealing ring.
3. Once the oil has completely drained out, screw in oil drain plug complete with sealing ring and retighten.

Note: Dispose of the oil in accordance with the applicable environmental regulations.

Pouring in engine oil

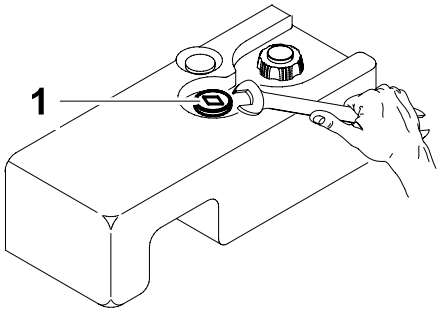

Item	Designation
1	Oil cap

1. Remove dirt around the oil cap.
2. Unscrew oil cap.
3. If necessary, pour engine oil into the opening until the upper mark is reached on the oil level dipstick.
   See the chapter *Technical data* for the oil specification.
4. Screw in cover for oil filler cap, and tighten until hand-tight.
5. Wipe off any spilled oil.

10.2.5 Checking air cleaner and cleaning or replacing air cleaner cartridge

Performing preparations

1. Place the machine upright on a flat surface.
2. Deactivate the machine.
3. Fold up cover.

Removing the air cleaner cartridge

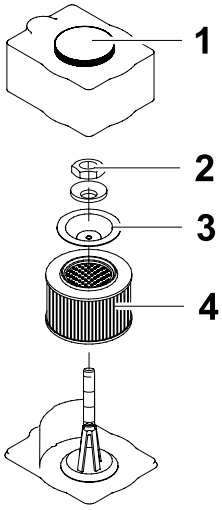

Item	Designation	Item	Designation
1	Air cleaner cap	3	Disc
2	Nut	4	Air cleaner cartridge

1. Remove any dirt around the air cleaner cap.
2. Unscrew and remove air cleaner cap.
3. Unscrew and remove nut.
4. Remove disc.
5. Remove air cleaner cartridge.

Checking and cleaning the air cleaner cartridge

- Tap out air cleaner cartridge and blow out from inside to outside with compressed air.

If the dust can no longer be removed, change the air cleaner cartridge.

Installing air cleaner cartridge

1. Insert air cleaner cartridge.
2. Replace disc.
3. Use nut to tighten air cleaner cartridge and disc.
4. Position the air cleaner cap and tighten the same.

NOTICE
Operating the engine without air cleaner can cause rapid engine wear.
▶ Do not run the engine without an air cleaner.

10.2.6 Checking exciter oil level and topping up exciter oil

Performing preparations

1. Place the machine upright on a flat surface.
2. Deactivate the machine.
3. Let machine cool off.
4. Lay out impermeable sheet over the workspace to protect the ground from the oil.

Checking exciter oil level and topping up exciter oil

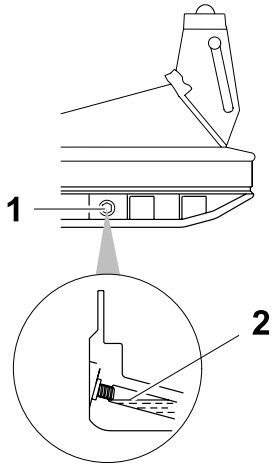

Item	Designation
1	Screw plug with sealing ring
2	Exciter oil level

1. Remove any dirt around the screw plug.

WARNING
Hot exciter oil can spill, causing scalding injuries.
- ▶ Do not open the screw plug on the exiter while the exciter oil is hot.
- ▶ Let machine cool off.

2. Unscrew the screw plug and remove complete with sealing ring.
3. Check whether the exciter oil reaches the start of the thread of the filler hole.
4. If the exciter oil level is below the thread, use a clean funnel to replenish the exciter oil.
   See the chapter *Technical data* for the oil specification.
5. Screw in screw plug complete with a new sealing ring and tighten.
   Torque 100 Nm.
6. Wipe off any spilled oil.

Note: Dispose of the oil in accordance with the applicable environmental regulations.

10.2.7 Checking hydraulic oil level and refilling hydraulic oil

Performing preparations

1. Place the machine upright on a flat surface.
2. Deactivate the machine.
3. Let machine cool off.

Checking hydraulic oil level and refilling hydraulic oil

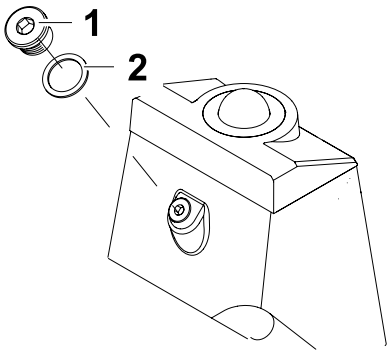

Item	Designation
1	Screw plug
2	Gasket

1. Remove any dirt around the screw plug.

WARNING
Hot hydraulic oil can cause scalding injuries.
- ▶ Do not open the screw plug as long as the hydraulic oil is hot.
- ▶ Let machine cool off.

2. Unscrew screw plug complete with sealing ring and remove the same.
3. Check whether the hydraulic oil level reaches to the bottom start of the filler hole thread.
4. If the hydraulic oil level does not reach to the bottom start of the thread, replenish hydraulic oil.
   See the chapter *Technical data* for the oil specification.
5. Screw in screw plug complete with a new sealing ring and tighten.

10.2.8 Checking the battery acid level

WARNING
Danger of injuries from corrosive acid.
▶ Wear safety glasses and acid-proof protective gloves.

Using only a Wacker Neuson battery

Use only Wacker Neuson batteries to replace defective batteries, see chapter *Technical Data*.

Only the Wacker Neuson battery is vibration resistant and thus suitable for the high vibratory stresses.

Performing preparations

1. Place the machine upright on a flat surface.
2. Deactivate the machine.
3. Let machine cool off.

Removing battery cover

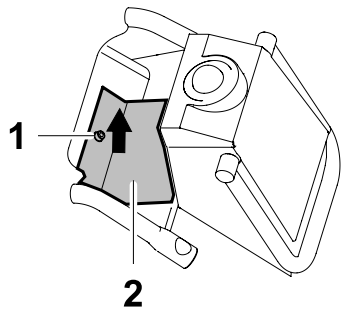

Item	Designation
1	Screw
2	Battery cover

▶ Unscrew and remove air battery cover.

Checking battery acid level and replenishing with distilled water

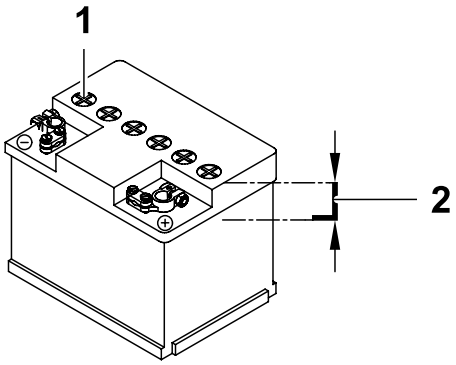

Item	Designation
1	Screwed nose cap of the cell (6 pieces)
2	Mark

1. Unscrew and remove the screwed nose caps of all cells.
2. Check whether the battery acid level is between the upper and lower mark.
3. If the battery acid level is below the lower mark, replenish with distilled until the upper mark is reached.
4. Tighten the screwed nose caps of all cells until hand-tight.

Installing battery cover

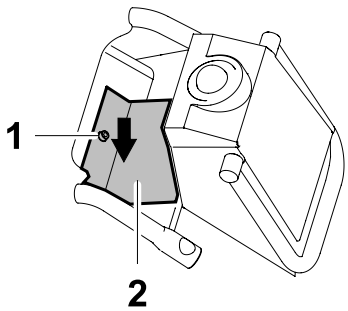

Item	Designation
1	Screw
2	Battery cover

▶ Position the battery cover and tighten it.
Torque 25 Nm.

10.2.9 Replacing the V-belt

Performing preparations

1. Place the machine upright on a flat surface.
2. Deactivate the machine.
3. Let machine cool off.

Removing parts

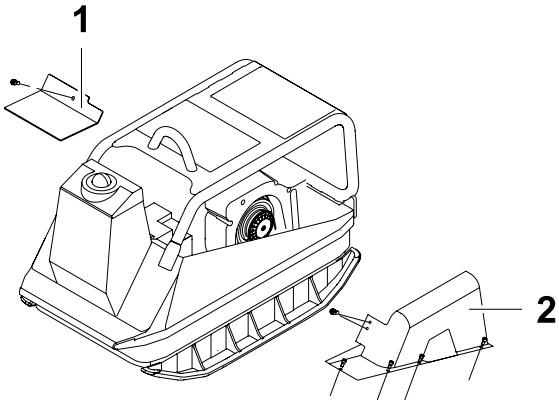

Item	Designation
1	Battery cover
2	Protective hood

1. Unscrew and remove air battery cover.
2. Unscrew and remove lateral protection cover.

Replacing the V-belt

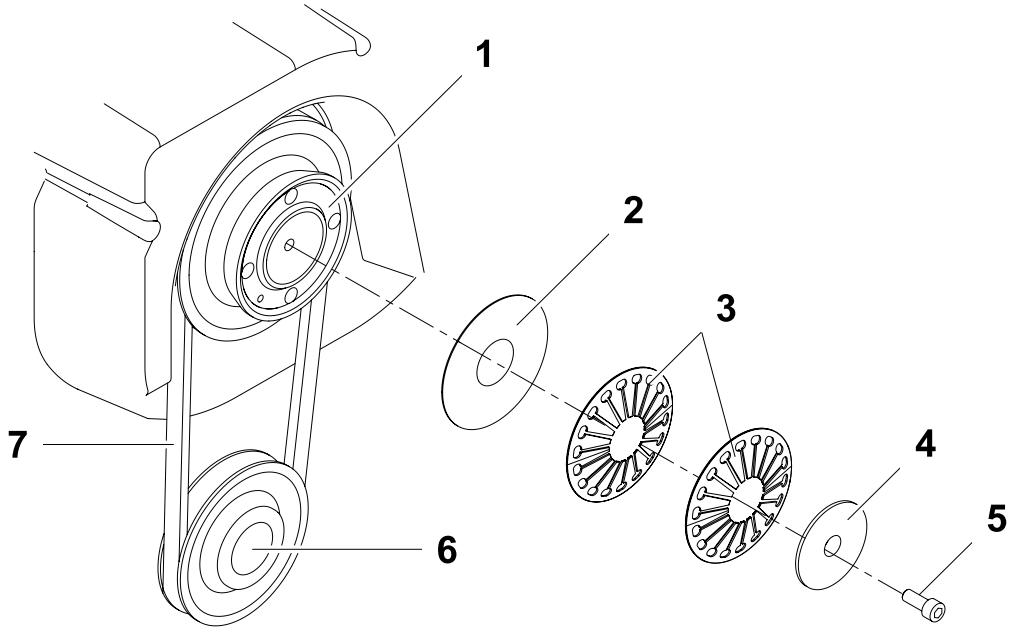

Item	Designation	Item	Designation
1	V-belt pulley (engine)	5	Screw
2	Seal	6	V-belt pulley (exciter)
3	Disc spring (2 pieces)	7	V-belt
4	Mushroom washer		

1. Loosen the screw.
2. Remove screw, mushroom washer, disc springs and seal.
3. Pull V-belt pulley of the engine away from the machine toward the outside. This slackens the V-belt.
4. Press V-belt downwards until V-belt slides off the lower V-belt pulley.
5. Withdraw V-belt in an upward direction.
6. Press new V-belt into exciter housing.
7. Place V-belt into V-belt pulley of the engine.
8. Place V-belt into V-belt pulley of the exciter.

   Note: Move the V-belt to and fro to check whether this is seated in the V-belt pulley of the exciter.
9. Press V-belt pulley of the engine away from the machine toward the inside.
10. Use screw to screw on seal, disc springs and mushroom washer. Torque 49 Nm.

Note: Due to the use of the automatic centrifugal clutch, the V-belt does not need to be retightened.

NOTICE

▶ Do not oil or grease clutch components (graphite bushes will be destroyed).

Installing components

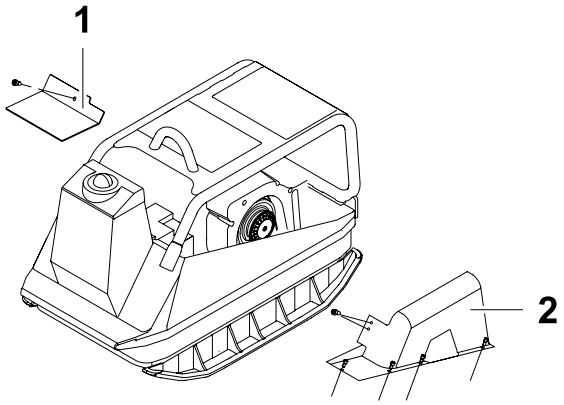

Item	Designation
1	Battery cover
2	Protective hood

1. Position the lateral protection cover and tighten it.
   Torque 25 Nm.
2. Position the battery cover and tighten it.
   Torque 25 Nm.

11 Malfunctions

Please refer to the following table if the machine does not work properly. It contains potential faults, their causes and remedies.

Notify your Wacker Neuson contact in case of malfunctions you cannot or may not remedy yourself.

11.1 Machine malfunctions

Malfunction	Cause	Remedy
Engine does not start.	Battery is discharged.	Jumpstart with a donor battery.
	Machine is not activated.	Activate machine.
	Fuel tank is empty.	Top up with fuel.
	Fuel filter is dirty.	Have the fuel filter replaced.*
	Starter is defective.	Have the machine repaired. *
	Remote control, decoder, or wiring harness is defective.	Have the machine repaired. *
Advance travel speed too low.	Material fatigue of the compression spring in the exciter.	Have the machine repaired. *
	V-belt is worn out.	Replace V-belt.
No reverse travel.	There is insufficient oil in the hydraulic system.	Replenish hydraulic oil at the control panel.
	There is air in the hydraulic system.	Bleed hydraulic system. *
Loss of hydraulic oil.	The hydraulic system has a leak.	Have the machine repaired. *
Remote control is controlling another machine.	Both machines are set to the same transmission channel.	Change the transmission channel on one machine.

* Have these tasks carried out by the service department of your Wacker Neuson contact person.

11.2 Malfunction messages on the control panel

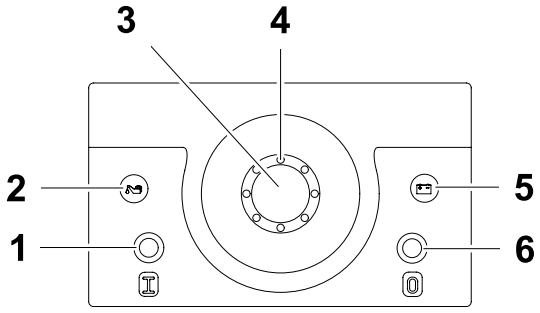

Item	Designation	Item	Designation
1	ON switch	4	LED ring
2	Oil pressure control lamp	5	Charging control lamp
3	Receiver unit	6	OFF switch

Malfunction	Cause	Remedy
Charging control lamp is lit in red while the engine is running.	Generator, charge control, battery, or electrical connection is defective.	Have the machine repaired. *
Oil pressure control lamp is lit in red while the engine is running.	Engine oil level is too low.	Top up with engine oil.
	Oil pressure switch or electrical connection is defective.	Have the machine repaired. *
Oil pressure control lamp or *Charging* control lamp does not light up after the machine has been activated.	Control lamp for *oil pressure* or control lamp *Charging* is without any electrical connection or defective.	Have the machine repaired. *
LED ring does not light. Pressing the ON switch does not activate the machine.	Battery is discharged.	Charge battery and, if necessary, check charge control.*
	ON switch, decoder, or wiring harness is defective.	Have the machine repaired. *
	ON switch or electrical connection is defective.	
	LED ring or electrical connection is defective.	

Malfunction	Cause	Remedy
LED ring lights. Machine does not react to remote control commands.	Remote control is turned off.	Turn on remote control.
	Remote control battery is discharged.	Recharge or change remote control battery.
	Remote control is defective.	Change remote control or have remote control repaired. *
	Different transmission channels of remote control and decoder.	Set transmission channel.
	User is outside of the receiving area.	Enter the receiving area of the machine.
	No visual contact between remote control and receiver unit.	Establish visual contact with the receiver unit.
	Receiver units or remote control are dirty.	Clean remote control and receiver units.
	Decoder or receiver unit is defective.	Have the machine repaired. *
LED ring is flashing fast. Machine does not react to remote control commands.	User is in the proximity area.	Leave the machine's proximity area.
LED ring lights. Pressing the OFF switch does not deactivate the machine.	OFF switch or electrical connection is defective.	Have the machine repaired. *
	Decoder is defective.	Have the machine repaired. *
After pressing the ON switch, the LED ring extinguishes again after a short time.	OFF switch or electrical connection is defective.	Have the machine repaired. *
LED ring is flashing. After the start button has been pressed, the engine does not start.	Battery is discharged.	Charge battery and, if necessary, check function of the charge control. *
	Starter or electrical connection is defective.	Have the machine repaired. *
	Remote control, decoder, or wiring harness is defective.	Have the machine repaired. *

11.3 Malfunction messages in the control lamps of the remote control

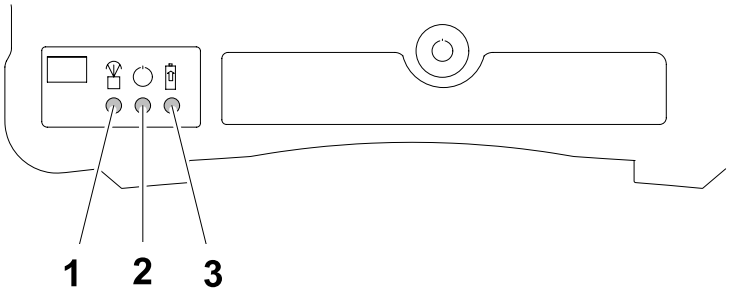

Item	Designation	Item	Designation
1	Diagnostic control lamp	3	Charging control lamp
2	Operation control lamp		

Malfunction	Cause	Remedy
Operation control lamp flashes or is lit in red.	Remote control battery is discharged.	Recharge or change remote control battery.
		Operate machine with coiled helix cable (while simultaneously charging the battery).
The *Operation* control lamp does not flash after the remote control has been turned on.	Remote control battery is discharged.	Recharge or change remote control battery.
	Remote control is defective.	Change remote control or have remote control repaired. *
The *Operation* control lamp is lit in red, and the *Diagnostic* control lamp is flashing green.	Control lever is defective.	Have control lever replaced. *
	Remote control is defective.	Change remote control or have remote control repaired. *
Charging control lamp flashes green.	The battery is automatically preheated for charging. It may not be possible to recharge the battery at temperatures below 0 °C.	- Wait until the *Charging* control lamp is lit in green and charging begins. - Charge the battery at temperatures above 0 °C.
Remote control turns itself off.	If no button on the remote control is pressed, the remote control will turn off automatically after 10 minutes.	—

* Have these tasks carried out by the service department of your Wacker Neuson contact person.

11.4 Eliminating malfunctions

11.4.1 Jumpstart with a donor battery

If the machine's battery is discharged and the engine can no longer be started, the machine may be jumpstarted with a donor battery.

WARNING
Danger of explosion due to detonating gas.
Injury may result from spraying acid.
- ▶ Wear safety glasses and acid-proof protective gloves.
- ▶ The donor battery and the machine's battery must have the same voltage (12 V).
- ▶ Avoid short circuit due to voltage reversal (positive to positive, negative to negative).
- ▶ Follow the booster cable connection sequence.

Note: Use only insulated booster cables with a cross section of at least 16 mm².

Removing battery cover

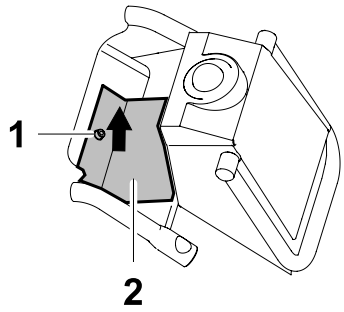

Item	Designation
1	Screw
2	Battery cover

1. Unscrew and remove air battery cover.
2. Remove positive terminal cover.

Connecting jumper cable

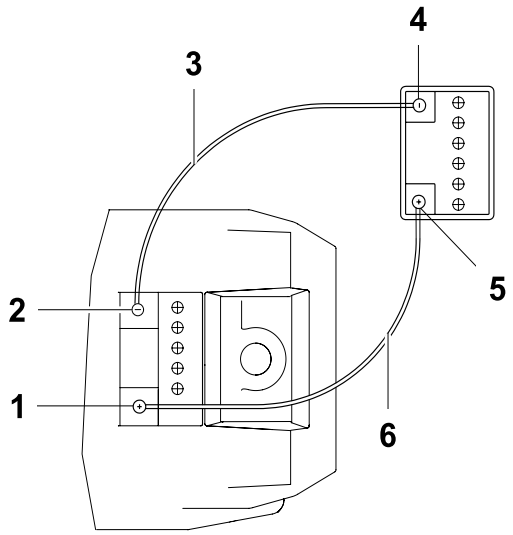

Item	Designation	Item	Designation
1	Positive terminal of the discharged battery	4	Negative terminal of the donor battery
2	Negative terminal of the discharged battery	5	Positive terminal of the donor battery
3	Black booster cable	6	Red booster cable

1. Clamp the clamping pliers of the red booster cable to the positive terminal of the discharged battery.
2. Clamp the second clamping pliers of the red booster cable to the positive terminal of the donor battery.
3. Clamp the clamping pliers of the black booster cable to the negative terminal of the donor battery.
4. Clamp the second pair of clamping pliers of the black booster cable to the negative terminal of the discharged battery.

Jumpstart

1. Turn on remote control.
2. Activate machine.
3. Start the engine.
   If the engine does not start after a maximum of 15 seconds, cancel start attempt and contact your Wacker Neuson representative.
4. Let the engine run for a few minutes.

Disconnecting booster cable

1. Disconnect the clamping pliers of the black booster cable from the negative terminal of the discharged battery.
2. Disconnect the second clamping pliers of the black booster cable from the donor battery.
3. Disconnect the clamping pliers of the red booster cable from the positive terminal of the discharged battery.
4. Disconnect the second clamping pliers of the red booster cable from positive terminal of the donor battery.

Installing battery cover

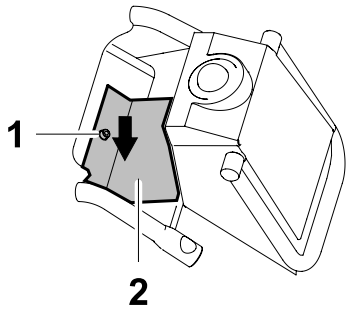

Item	Designation
1	Screw
2	Battery cover

1. Fasten positive terminal cover.
2. Position the battery cover and tighten it.
   Torque 25 Nm.

12 Accessories

There is a range of accessories available for the machine.

For more information on the individual accessories, visit the following website: www.wackerneuson.com.

12.1 Battery

A replacement battery is particularly worthwhile if you intend to operate the machine for a longer period of time without interruption.

12.2 Support plates

Support plates in different widths are available for this machine; by means of these support plates, you can increase or decrease the working width of the machine.

13 Disposal

13.1 Disposal of batteries

For customers in EU countries

This device contains one or more batteries or rechargeable batteries (hereafter referred to as "batteries"). This battery is subject to the European Directive 2006/66/EC on (waste) batteries, as well as the corresponding national legislation. The battery directive outlines the procedure for handling batteries across the EU.

The battery is labelled with the symbol of a crossed out dustbin shown here. Below this symbol is a list of all the harmful substances it contains, namely "Pb" for lead, "Cd" for cadmium and "Hg" for mercury.

Batteries may not be disposed of with normal household waste. As the end user, only dispose of waste batteries via the manufacturer, the dealer or special collection points for this purpose (legal obligation to return), which is free of charge. Dealers and manufacturers are obliged to accept the return of the batteries and to use them properly or to dispose of them as hazardous waste (legal obligation to accept). You can also return any used batteries you obtained from us free of charge. If you do not return the batteries to one of our branches personally, make sure you have paid sufficient postage for its return. Please also note any information in the sales contract and the general terms and conditions from the point of sales.

The proper disposal of the battery prevents the occurrence of any negative effects on people or the environment, follows the specific procedures for handling harmful substances and enables valuable raw materials to be recycled.

For customers in non-EU countries

This device contains one or more batteries or rechargeable batteries (hereafter referred to as "batteries"). The proper disposal of the battery prevents the occurrence of any negative effects on people or the environment, follows the specific procedures for handling harmful substances and enables valuable raw materials to be recycled. Therefore, we recommend that this battery is disposed of in a separate, environmentally-friendly waste collection and not with normal household waste. In some cases, national legislation stipulates the separate disposal of batteries. Please ensure you dispose of this battery in accordance with the valid regulations in your country.

14 Technical data

Machine

Designation	Unit	DPU 7060Fe	DPU 7060Fet
Item no.		0610236	0610237
Length x Width x Height	mm (ft)	1,217 x 770 x 795 (3.99 x 2.53 x 2.61)	
Operating weight without support plates with support plates 30 mm with support plates 80 mm with support plates 155 mm	kg (lb)	 584 (1,287.5) 604 (1,331.59) 615 (1,355.84) 629 (1,386.71)	 588 (1,296.32) 608 (1,340.41) 619 (1,364.66) 630 (1,388.91)
Speed control unit		—	■
Advance and reverse travel	m/min	18	
Area capacity	m^2/h (ft^2/h)	831.6 (8,951.27)	
Maximum permissible tilt	°	15	
Sound power level L_{WA} *	dB(A)	107	
Sound pressure level L_{pA} at operator's station **	dB(A)	87	

* According to DIN EN ISO 3744.

** According to DIN EN ISO 11201, measured at 3 m from the machine.

Drive engine

Designation	Unit	DPU 7060Fe	DPU 7060Fet
Manufacturer		Farymann	
Engine type		43 F	
Engine displacement	cm³ (in³)	709 (43.26)	
Rated output*	kW	10.5	
Rated speed	rpm	2,500	
Operating power	kW	9	
Operating blade speed	rpm	2,500	
Upper idling speed	rpm	2,700	

Designation	Unit	DPU 7060Fe	DPU 7060Fet
Fuel type		Diesel according to DIN EN 590	
Fuel consumption	l/h (gal/h)	1.4 (0.37)	
Tank capacity	l (gal)	7.5 (1.98)	
Oil specification		Fuchs Titan Unic 10W40 MC (SAE 10W40)	
Oil quantity	l (gal)	2.1 (0.55)	

* Equivalent to the installed power output in accordance with the directive 2000/14/EC.

Exciter

Designation	Unit	DPU 7060Fe	DPU 7060Fet
Vibrations	min^{-1} (Hz)	3,350 (56)	
Centrifugal force	kN	70	
Oil specification		Fuchs Titan Unic 10W40 MC (SAE 10W40)	
Oil quantity	l (gal)	1.5 (0.39)	

Electrical

Designation	Unit	DPU 7060Fe	DPU 7060Fet
Battery type		Special Wacker Neuson battery for vibrating plates, 12 V, 55 Ah	
Generator		Alternating current generator with electronic charge control	
Charge current max.	A	11.4	
Charging voltage	V	14	

Hydraulic

Designation	Unit	DPU 7060Fe	DPU 7060Fet
Oil specification		Fuchs Renolin MR 520	
Oil quantity	l (gal)	2.0 (0.53)	

Remote control

Designation	Unit	DPU 7060Fe	DPU 7060Fet
Transmission range	m (ft)	20 (65.62)	
Duration of operation	h	16	
Charging time with coiled helix cable	h	2	
Charging time with external charger	h	2	
Available transmission channels		16	
Battery type		NiMH	
Battery voltage	V	7.2	
Battery capacity	mAh	2,000	

15 Emission control systems information and warranty

The Emission Control Warranty and associated information is valid only for the U.S.A., its territories, and Canada.

Emission control systems warranty statement

See the *engine owner's manual* for the applicable exhaust and evaporative emission warranty statement.

EC Declaration of Conformity

Manufacturer

Wacker Neuson SE, Preußenstraße 41, 80809 München

Product

Type		DPU 7060Fe	DPU 7060Fet
Product type		**Vibrating plate**	
Item no.		0610236	0610237
Installed power output	kW	10.5	
Measured sound power level	dB(A)	107	
Guaranteed sound power level	dB(A)	109	

Conformity assessment procedure acc. to 2000/14/EC, Appendix VIII, 2005/88/EC at following test center:

VDE Prüf- und Zertifizierungsinstitut GmbH, Merianstraße 28, 63069 Offenbach/Main

Guidelines and standards

This is to certify that this product meets and complies with the relevant regulations and requirements of the following guidelines and standards:

2006/42/EC,

2000/14/EC, 2005/88/EC, 2004/108/EC, EN 13309:2000

Authorized person for technical documents:

Axel Häret, Wacker Neuson SE, Preußenstraße 41, 80809 München

Munich, 05.05.2011

Franz Beierlein
Head of product management

Dr. Michael Fischer
Head of Research and Development